Yukon Block Diagram

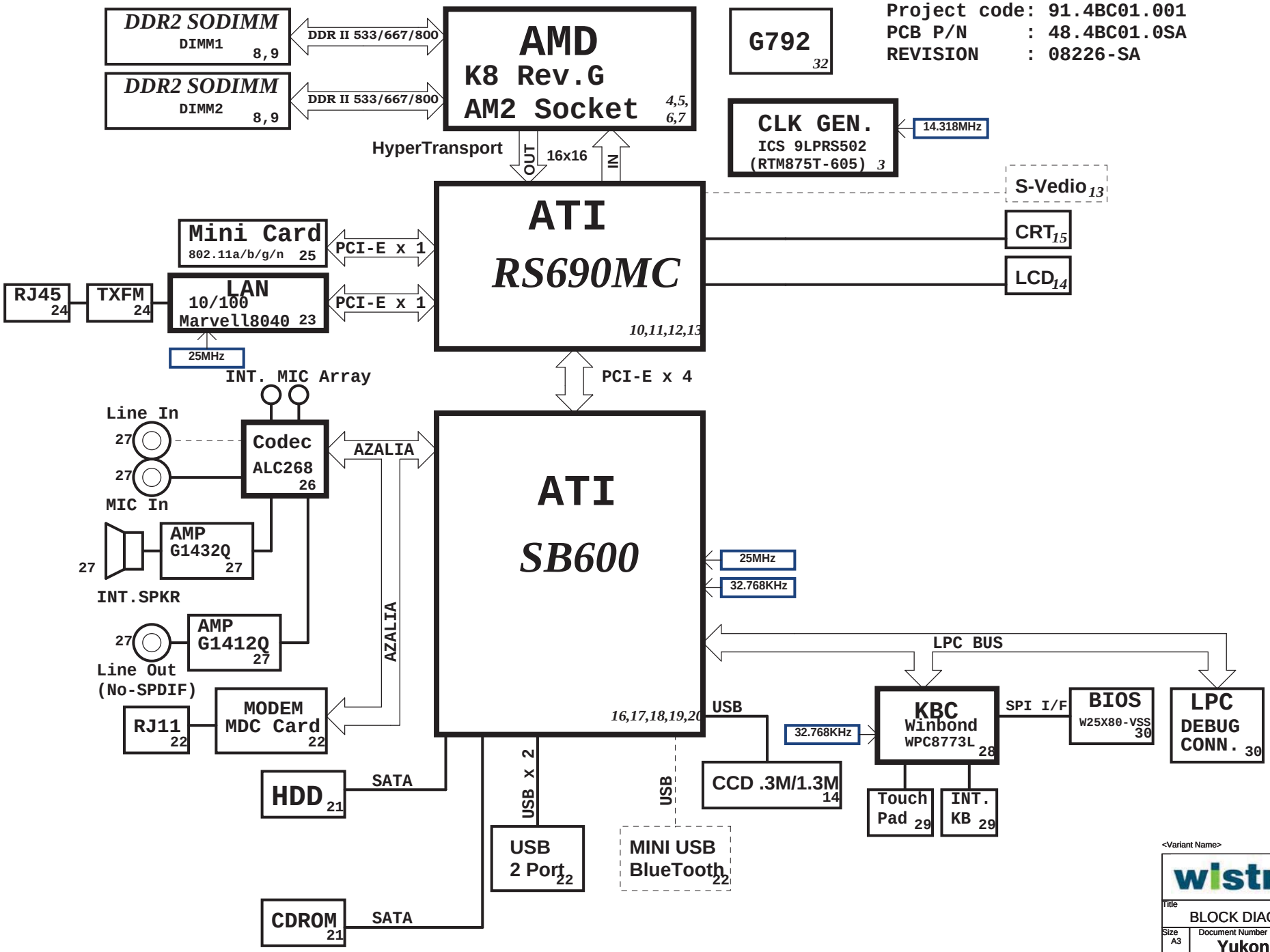

Project code: 91.4BC01.001
PCB P/N : 48.4BC01.0SA
REVISION : 08226-SA

PCB Layer Stackup
L1: Signal 1
L2: VCC
L3: Inner Signal 2
L4: Inner Signal 3
L5: GND
L6: Signal 4

CPU V_CORE

INPUT	OUTPUT
DCBATOUT	VCC_CORE_S0

SYSTEM DC/DC

INPUT	OUTPUT
DCBATOUT	1D2V_S0 1D8V_S3

SYSTEM DC/DC

INPUT	OUTPUT
DCBATOUT	5V_S5 3D3V_S5

SYSTEM LDO

INPUT	OUTPUT
1D8V_S3	0D9V_S3

SYSTEM LDO

INPUT	OUTPUT
3D3V_S5 3D3V_S0 3D3V_S0	1D2V_S5 2D5V_S0 1D5V_S0

SYSTEM LDO

INPUT	OUTPUT
DCBATOUT	5V_AUX_S5 3D3V_AUX_S5

Battery Charger

INPUTS	OUTPUTS
AD+ BAT+	DCBATOUT

<Variant Name>

wistron

Wistron Incorporated
21F, 88, Hsin Tai Wu Rd
Hsichih, Taipei

Title: BLOCK DIAGRAM

Size: A3 | Document Number: Yukon | Rev: SA

Date: Thursday, July 03, 2008 | Sheet 1 of 43

<Core Design>

緯創資通	**Wistron Corporation** 21F, 88, Sec.1, Hsin Tai Wu Rd., Hsichih, Taipei Hsien 221, Taiwan, R.O.C.
Title	**CHANGE HISTORY**
Size A3	Document Number **Yukon** Rev SA
Date: Thursday, July 03, 2008	Sheet 2 of 43

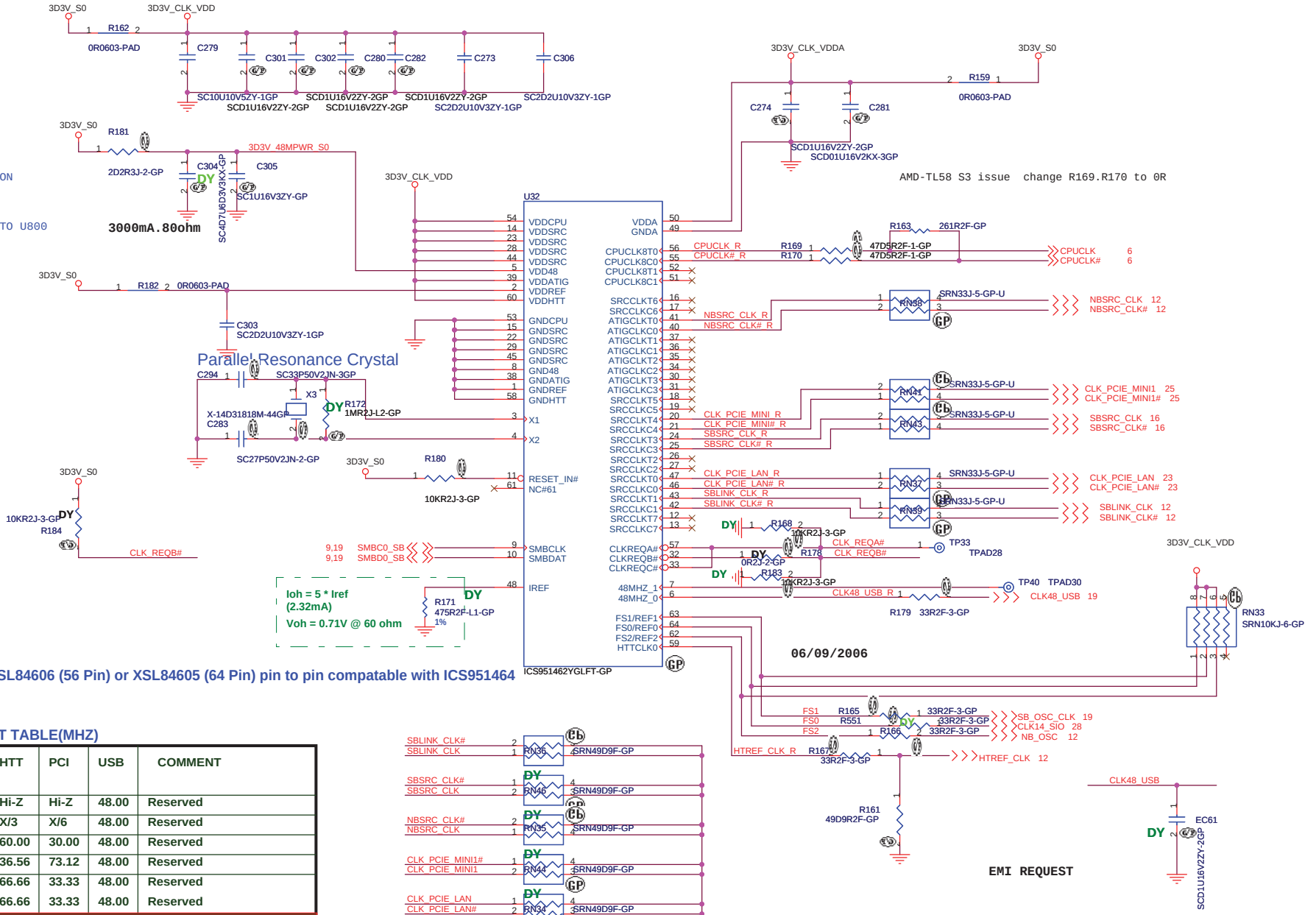

EXT CLK FREQUENCY SELECT TABLE(MHZ)

FS2	FS1	FS0	CPU	SRCCLK [2:1]	HTT	PCI	USB	COMMENT
0	0	0	Hi-Z	100.00	Hi-Z	Hi-Z	48.00	Reserved
0	0	1	X	100.00	X/3	X/6	48.00	Reserved
0	1	0	180.00	100.00	60.00	30.00	48.00	Reserved
0	1	1	220.00	100.00	36.56	73.12	48.00	Reserved
1	0	0	100.00	100.00	66.66	33.33	48.00	Reserved
1	0	1	133.33	100.00	66.66	33.33	48.00	Reserved
1	1	1	200.00	100.00	66.66	33.33	48.00	Normal ATHLON64 operation

緯創資通 Wistron Corporation
21F, 88, Sec.1, Hsin Tai Wu Rd., Hsichih, Taipei Hsien 221, Taiwan, R.O.C.

Title: CLKGEN_ICS951412

Size: A3 | Document Number: Yukon | Rev: SA

Date: Thursday, July 03, 2008 | Sheet 3 of 43

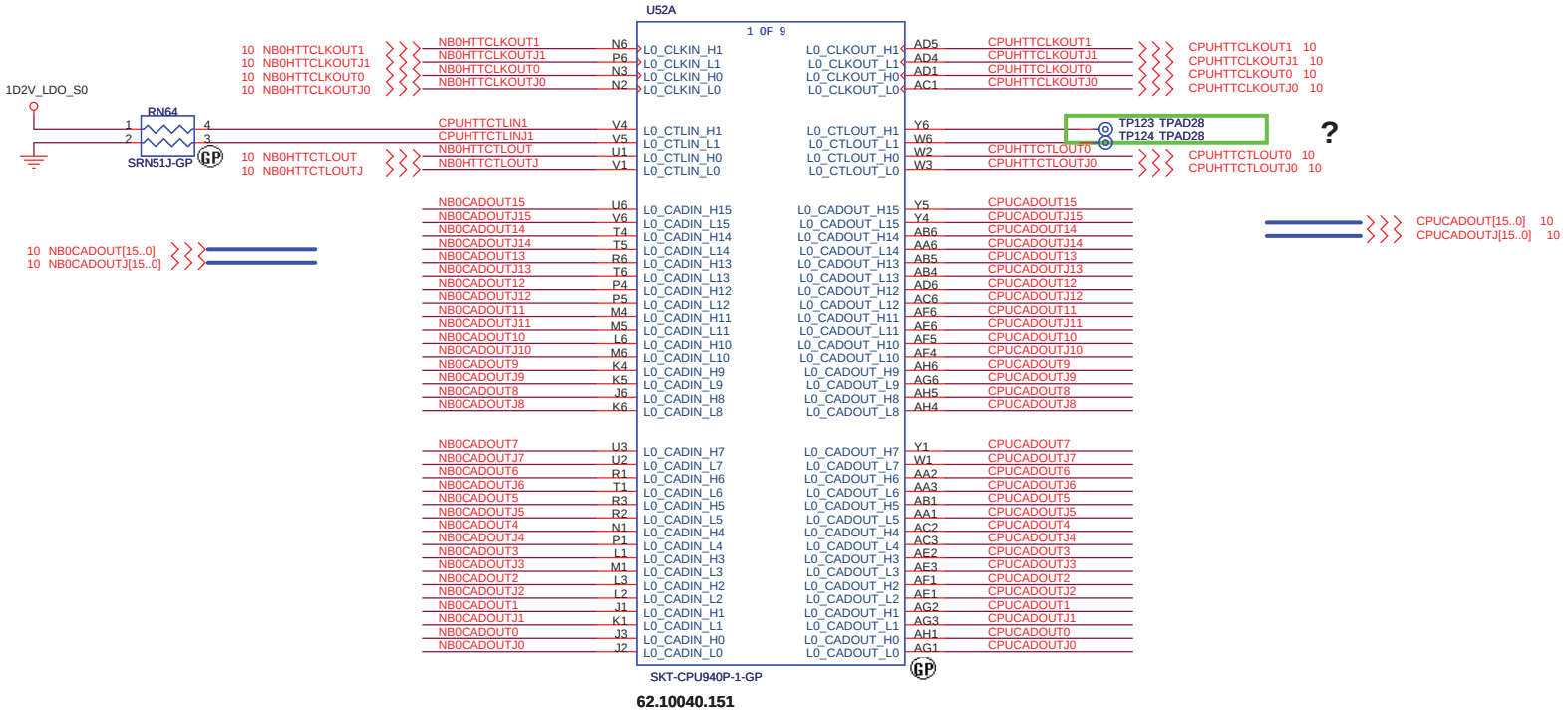

<Core Design>

緯創資通	**Wistron Corporation** 21F, 88, Sec.1, Hsin Tai Wu Rd., Hsichih, Taipei Hsien 221, Taiwan, R.O.C.	
Title	***CPU(1/4)_HyperTransport I/F***	
Size A3	Document Number **Yukon**	Rev SA
Date: Thursday, July 03, 2008	Sheet 4 of 43	

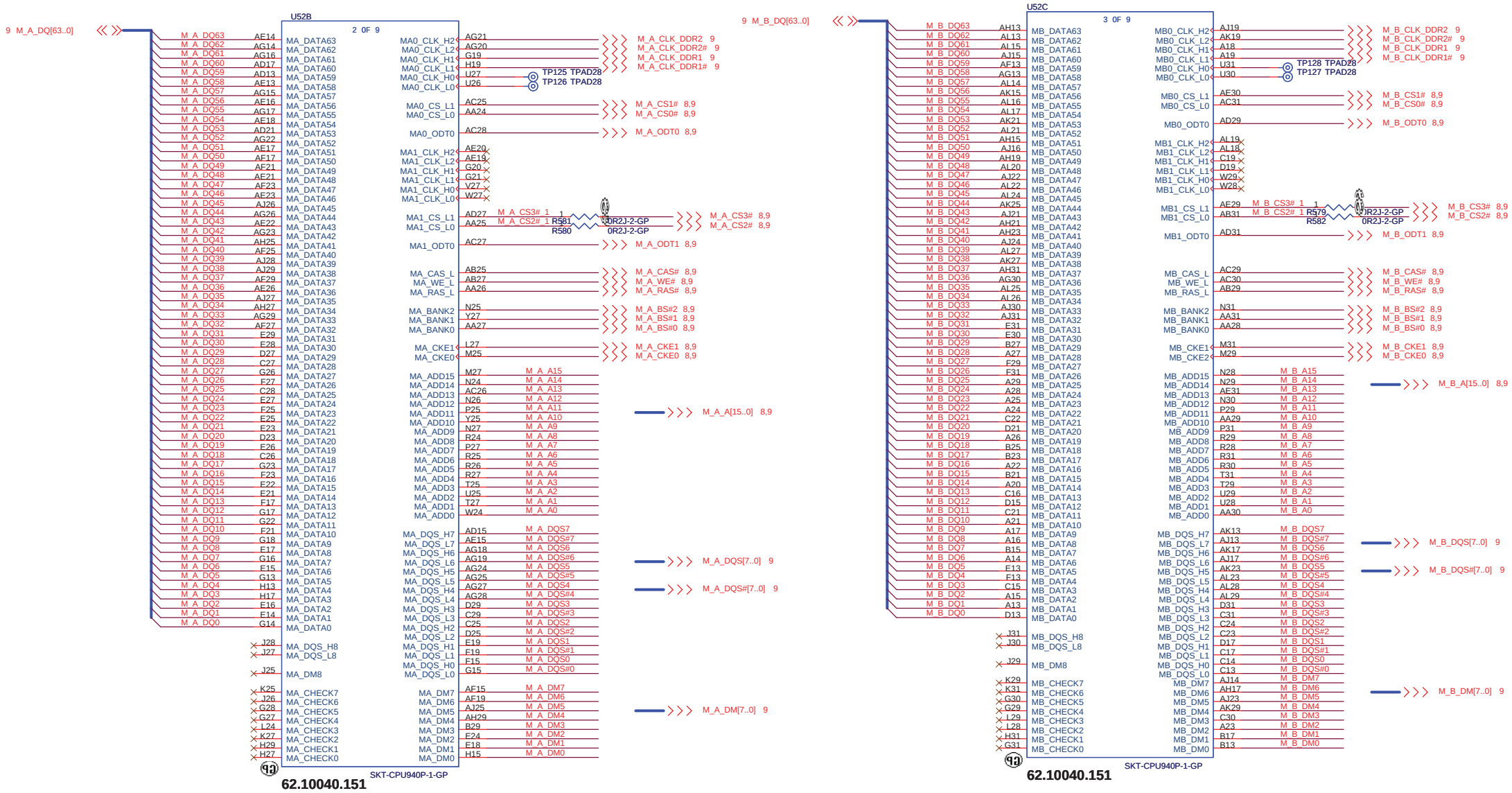

<Core Design>

緯創資通	**Wistron Corporation** 21F, 88, Sec.1, Hsin Tai Wu Rd., Hsichih, Taipei Hsien 221, Taiwan, R.O.C.
Title	***CPU(2/4)_DDR***
Size A3	Document Number **Yukon** Rev SA
Date: Thursday, July 03, 2008	Sheet 5 of 43

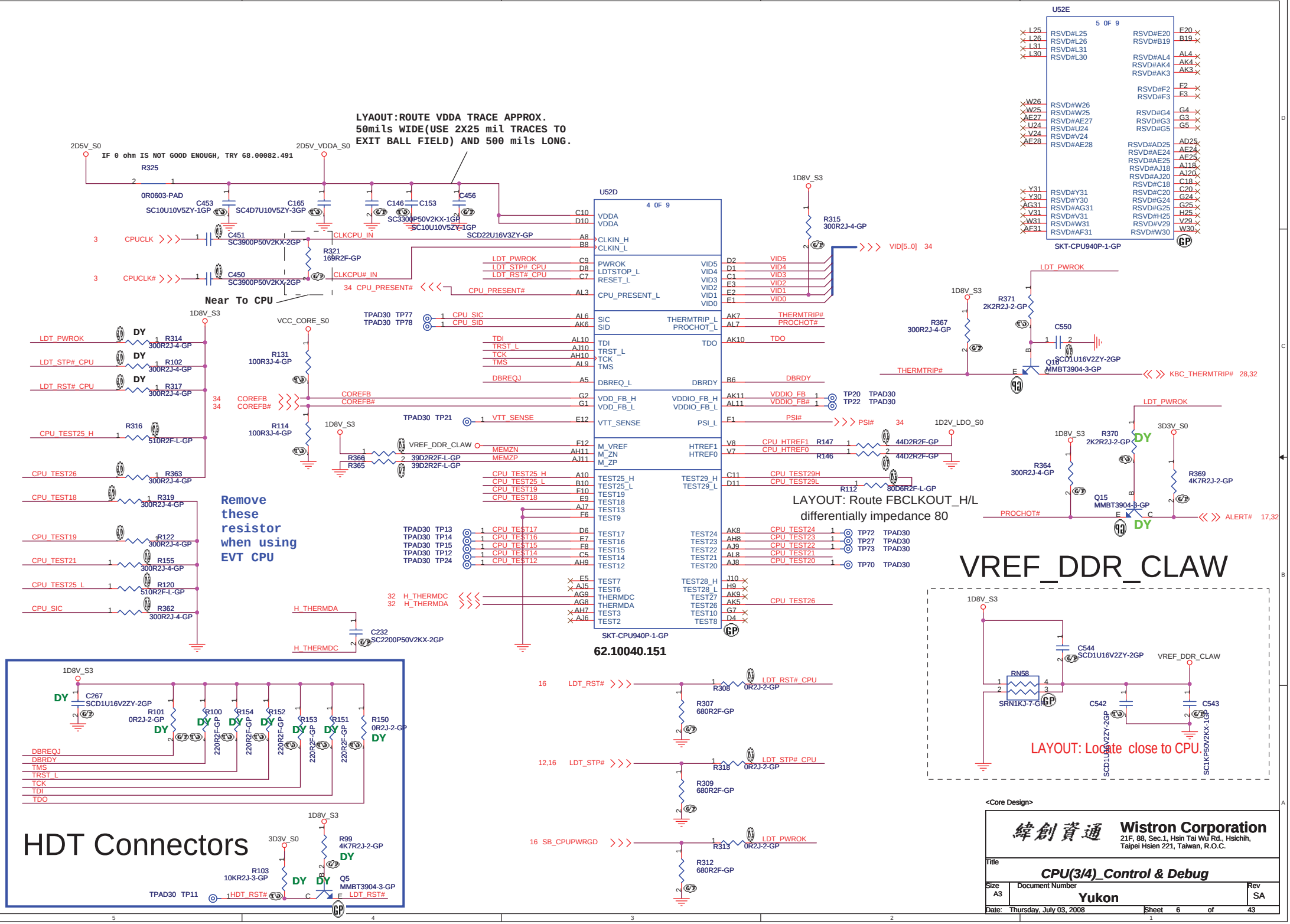
LYAOUT:ROUTE VDDA TRACE APPROX.
50mils WIDE(USE 2X25 mil TRACES TO
EXIT BALL FIELD) AND 500 mils LONG.
IF 0 ohm IS NOT GOOD ENOUGH, TRY 68.00082.491
Near To CPU
Remove these resistor when using EVT CPU
LAYOUT: Route FBCLKOUT_H/L differentially impedance 80
VREF_DDR_CLAW
LAYOUT: Locate close to CPU
HDT Connectors
U52D
SKT-CPU940P-1-GP
62.10040.151
U52E
SKT-CPU940P-1-GP
Wistron Corporation
21F, 88, Sec.1, Hsin Tai Wu Rd., Hsichih, Taipei Hsien 221, Taiwan, R.O.C.
Title
CPU(3/4)_Control & Debug
Size A3
Document Number Yukon
Rev SA
Date: Thursday, July 03, 2008
Sheet 6 of 43

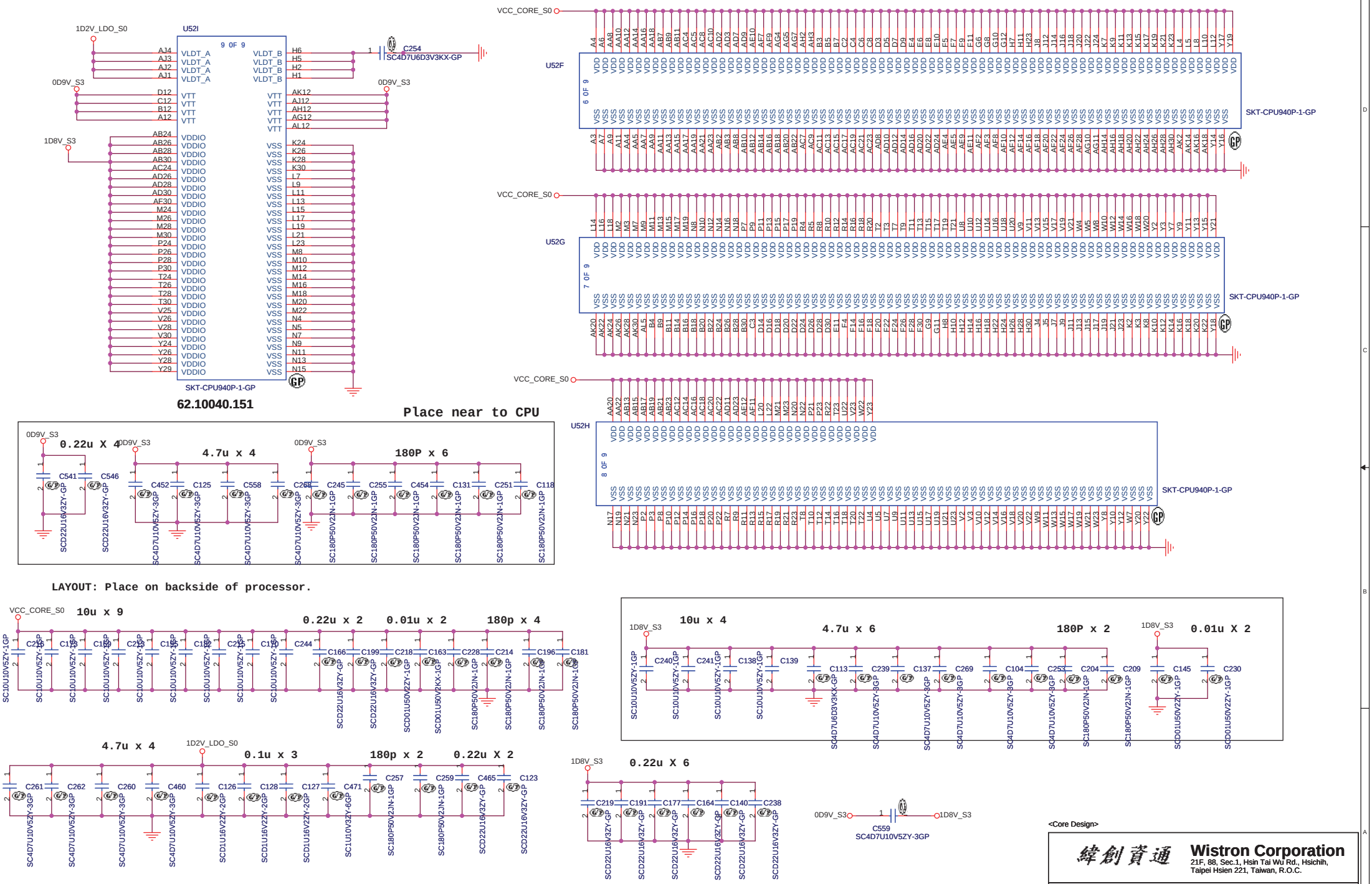

<Core Design>

Wistron Corporation
21F, 88, Sec.1, Hsin Tai Wu Rd., Hsichih, Taipei Hsien 221, Taiwan, R.O.C.

Title: CPU(4/4)_Power

Size: A3 | Document Number: Yukon | Rev: SA

Date: Tuesday, July 01, 2008 | Sheet 7 of 43

PARALLEL TERMINATION

Put decap near power(0.9V) and pull-up resistor

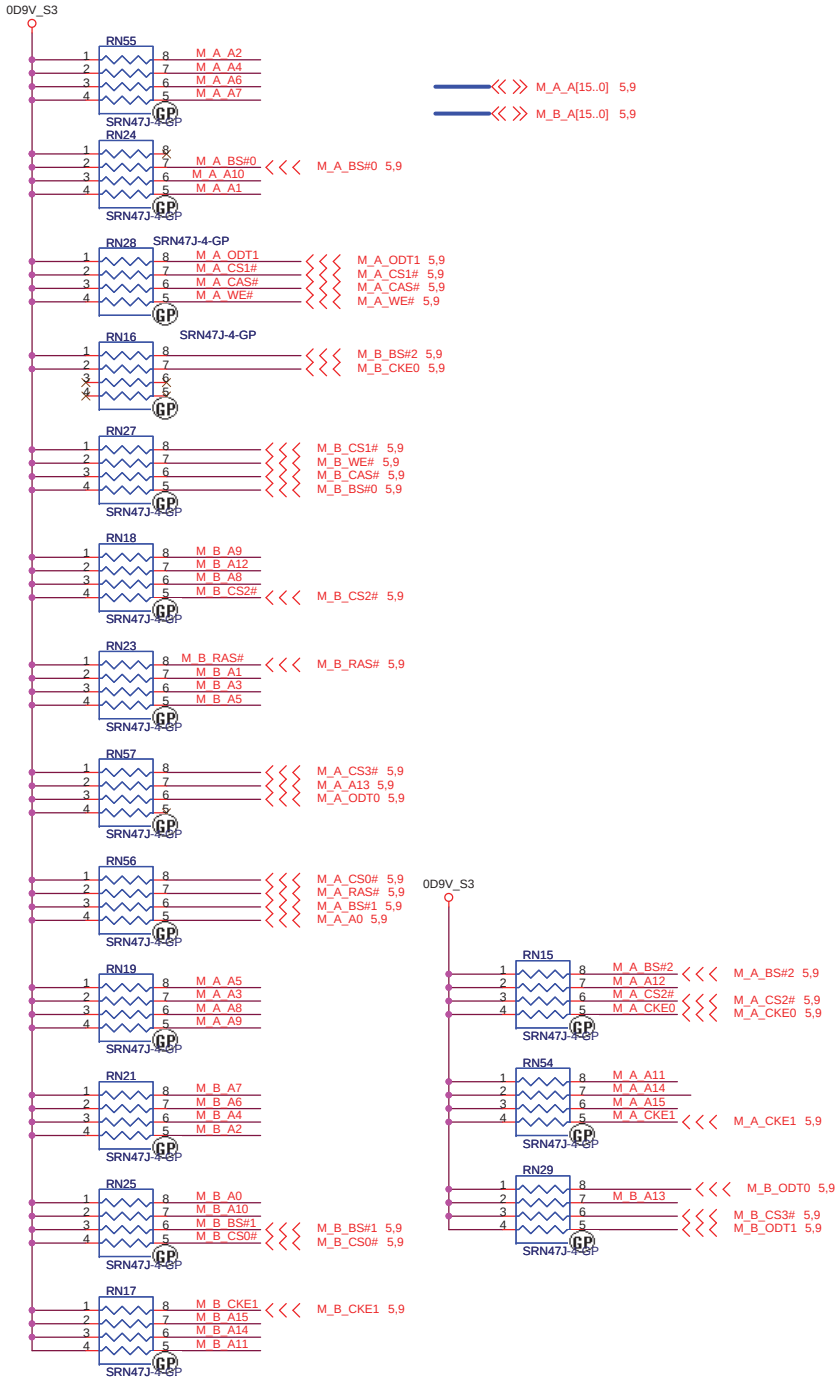

Decoupling Capacitor

Put decap near power(0.9V) and pull-up resistor

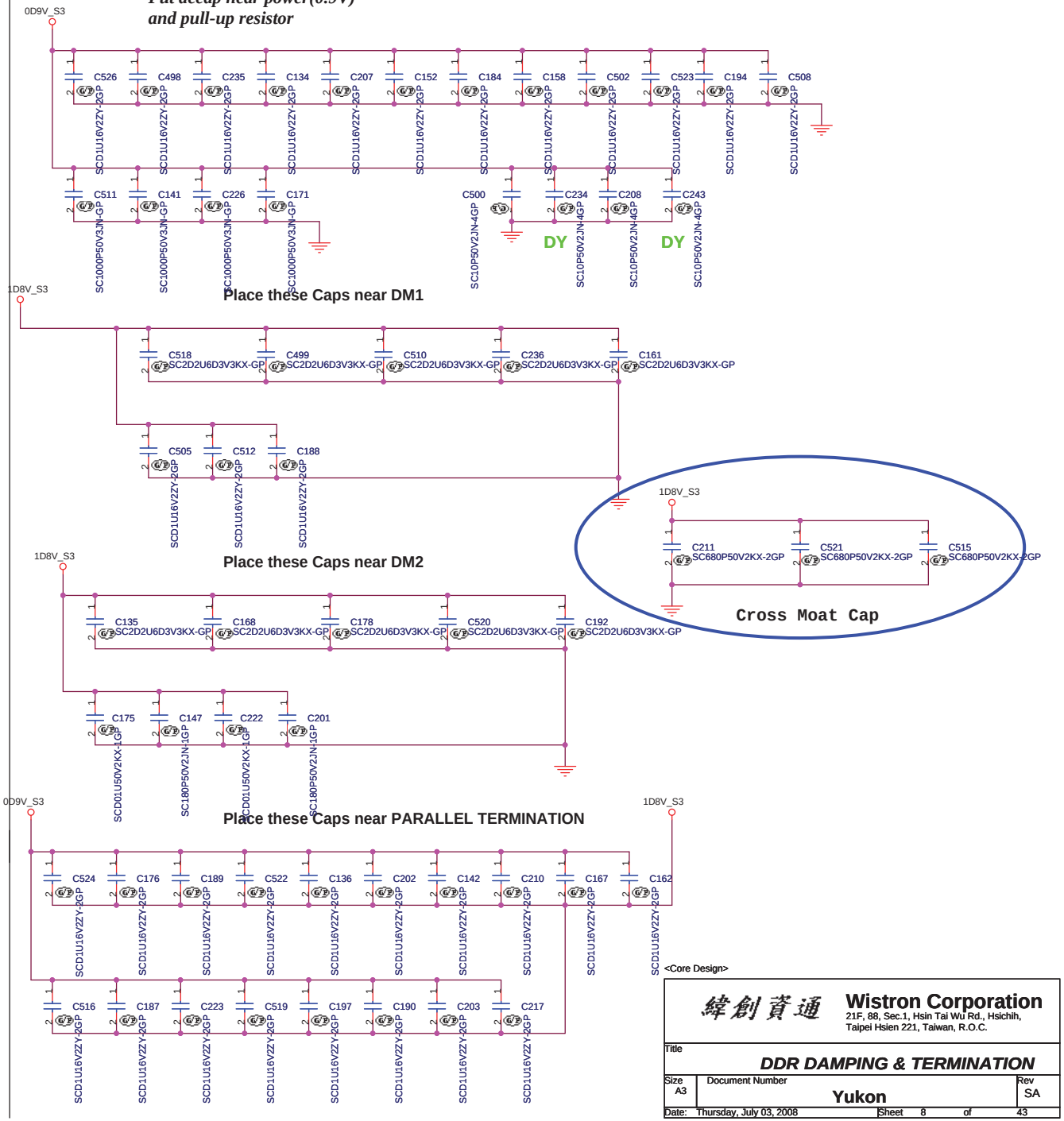

<Core Design>

緯創資通	**Wistron Corporation** 21F, 88, Sec.1, Hsin Tai Wu Rd., Hsichih, Taipei Hsien 221, Taiwan, R.O.C.	
Title	***DDR DAMPING & TERMINATION***	
Size A3	Document Number **Yukon**	Rev SA
Date: Thursday, July 03, 2008	Sheet 8 of 43	

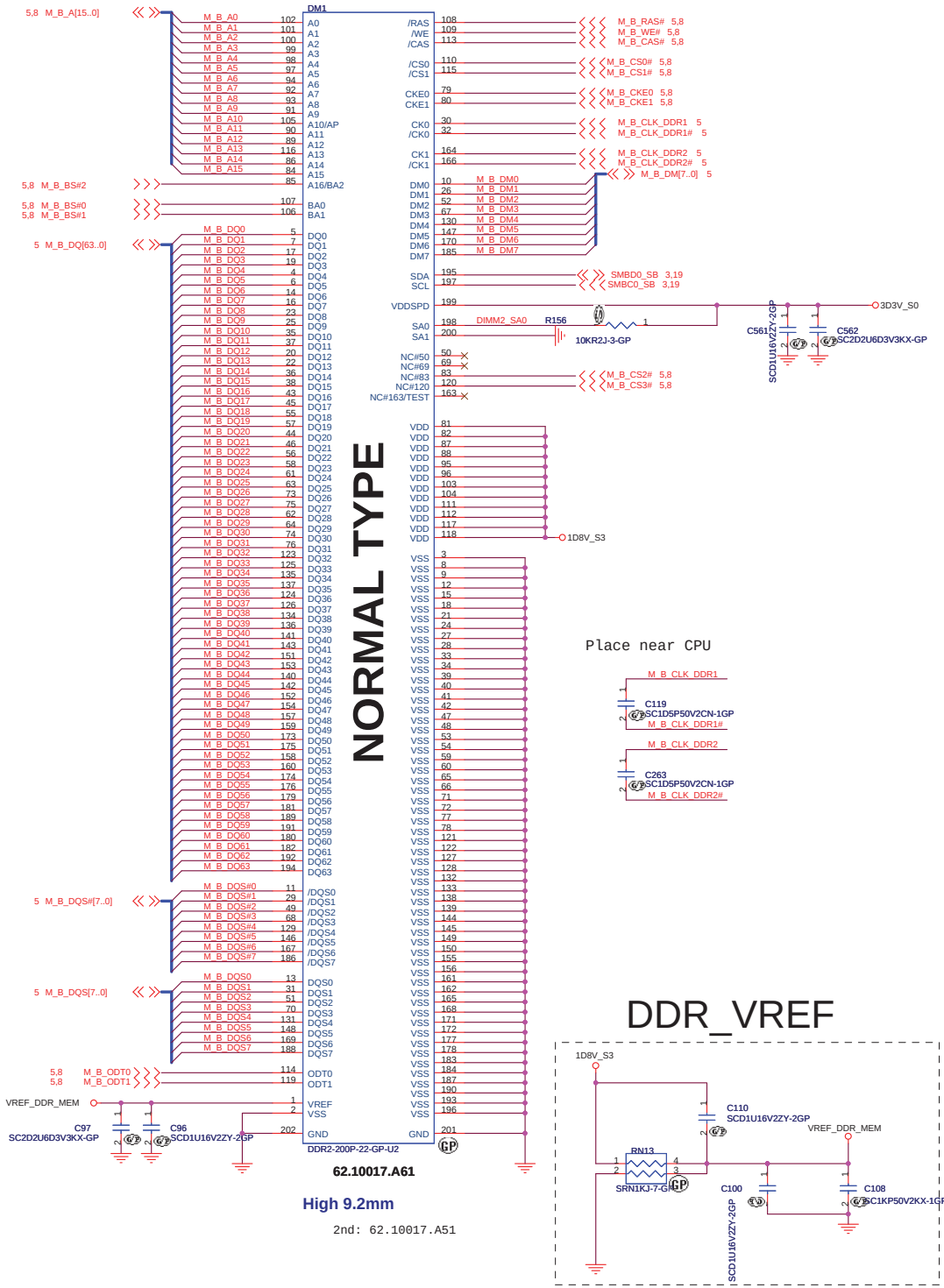

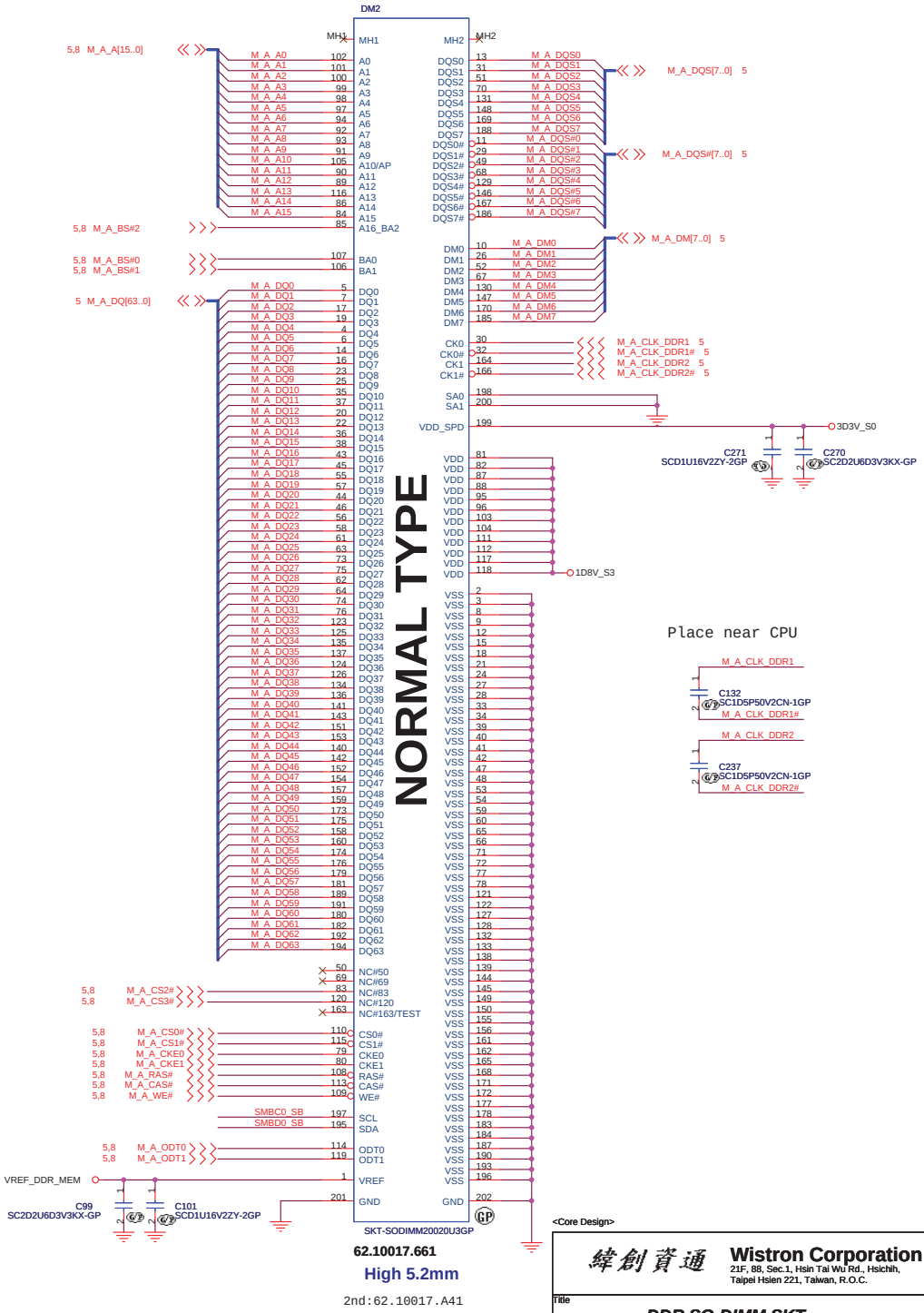

<Core Design>

Wistron Corporation
21F, 88, Sec.1, Hsin Tai Wu Rd., Hsichih,
Taipei Hsien 221, Taiwan, R.O.C.

Title: **DDR SO-DIMM SKT**

Size	Document Number	Rev
Custom	Yukon	SA

Date: Thursday, July 03, 2008 | Sheet 9 of 43

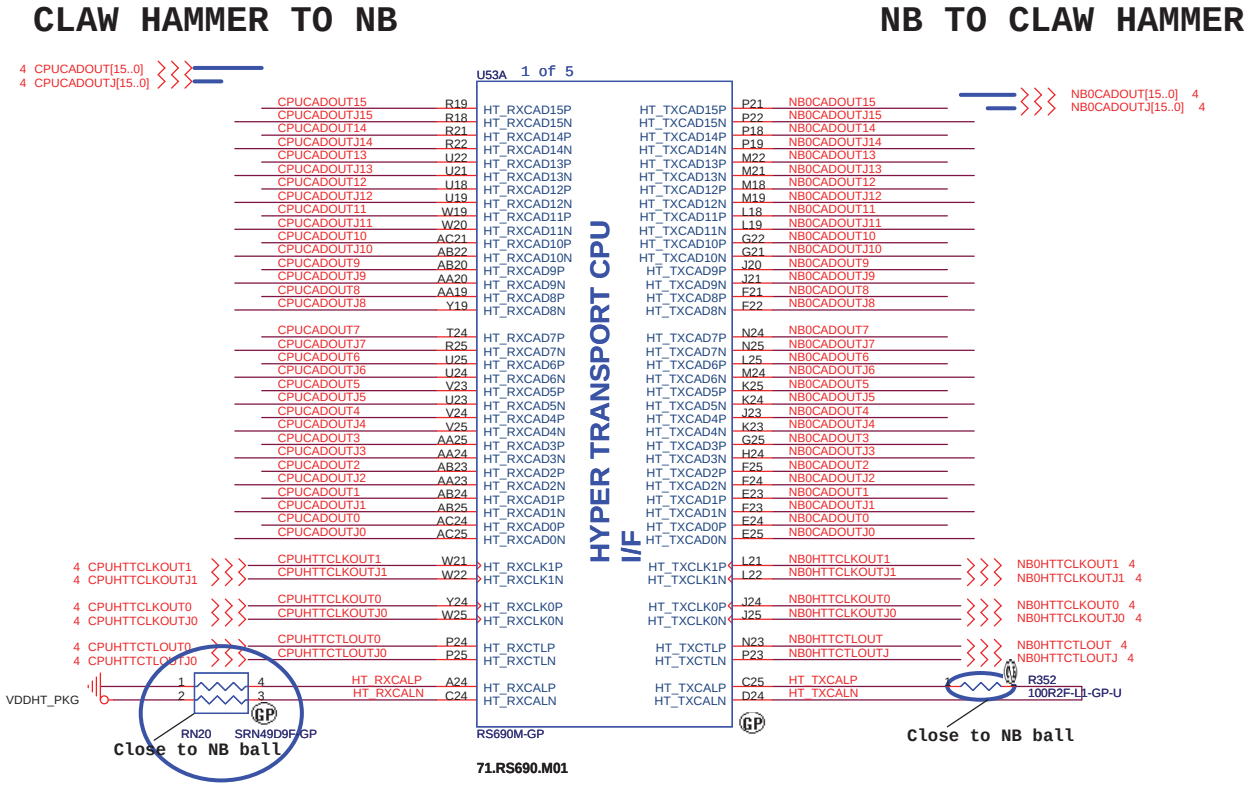

<Core Design>

緯創資通	Wistron Corporation 21F, 88, Sec.1, Hsin Tai Wu Rd., Hsichih, Taipei Hsien 221, Taiwan, R.O.C.	
Title	NB-RS690M_HT	
Size A3	Document Number Yukon	Rev SA
Date: Thursday, July 03, 2008	Sheet 10 of 43	

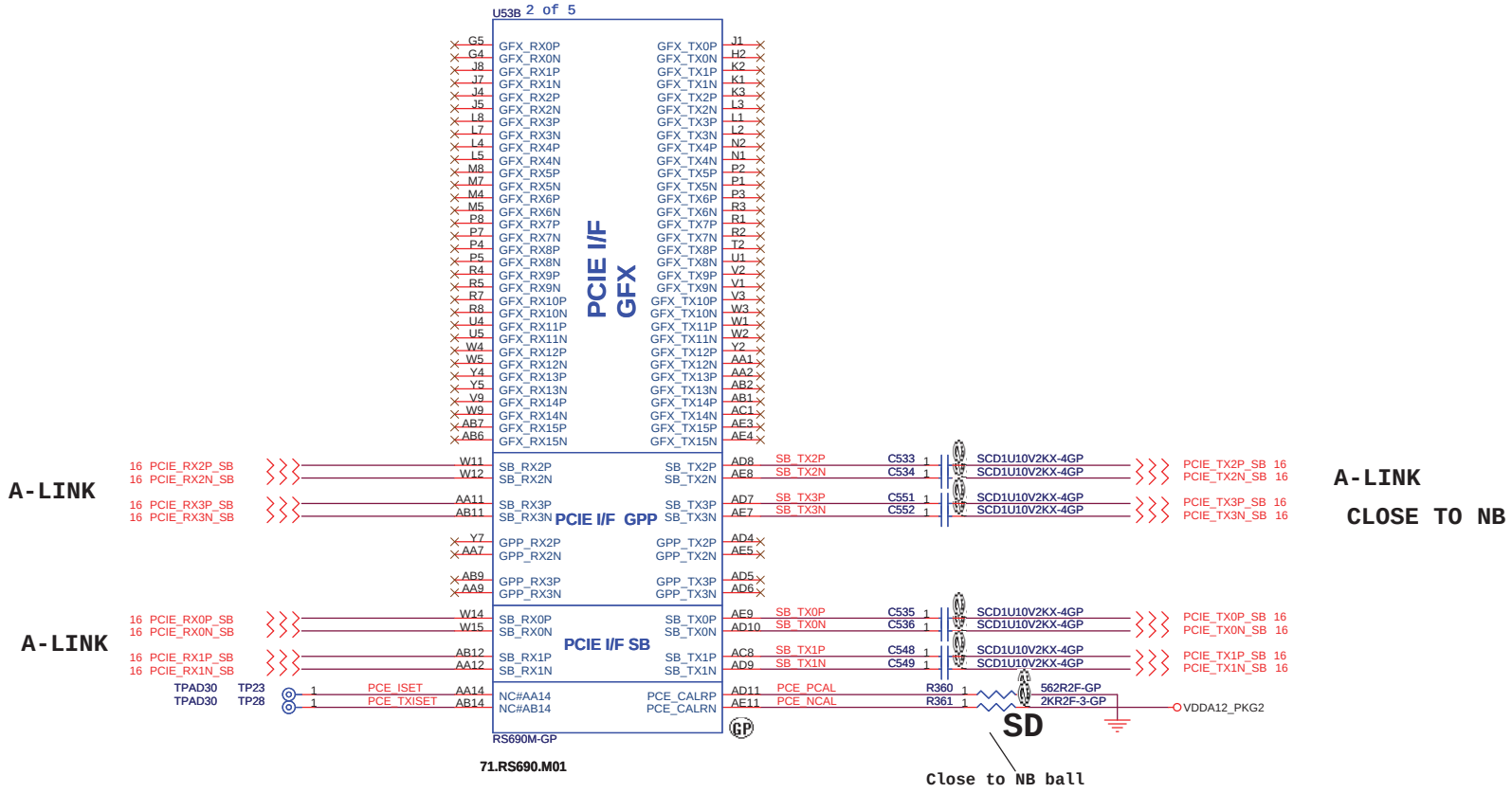

<Core Design>

緯創資通	**Wistron Corporation** 21F, 88, Sec.1, Hsin Tai Wu Rd., Hsichih, Taipei Hsien 221, Taiwan, R.O.C.
Title	NB-RS690M_MEM/PCIE_LINK I/F
Size A3	Document Number: Yukon
Rev	SA
Date: Thursday, July 03, 2008	Sheet 11 of 43

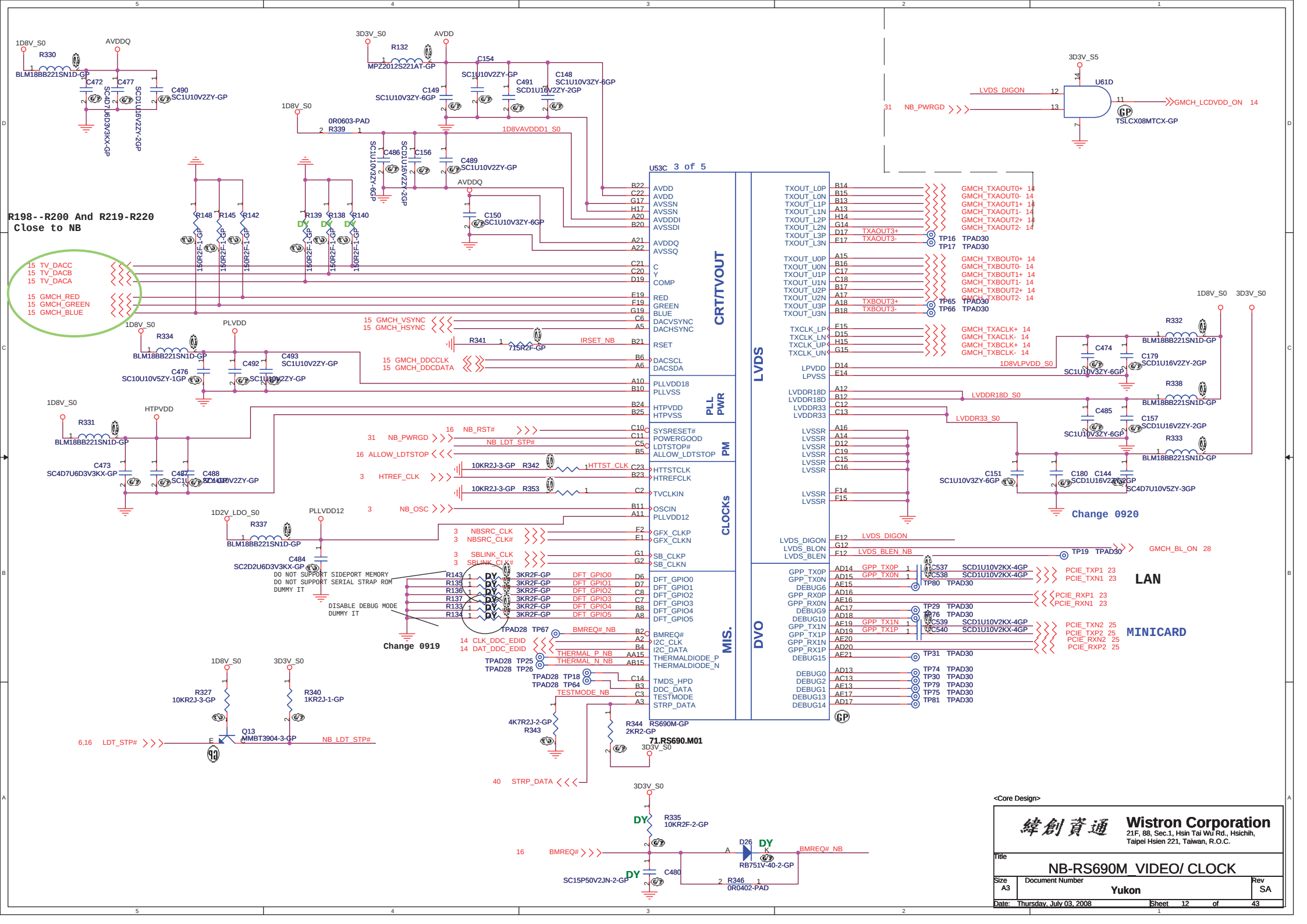
U53C 3 of 5
CRT/TVOUT
PLL PWR
PM
CLOCKs
MIS.
LVDS
DVO
R198--R200 And R219-R220 Close to NB
Change 0920
Change 0919
LAN
MINICARD
71.RS690.M01
Wistron Corporation
21F, 88, Sec.1, Hsin Tai Wu Rd., Hsichih, Taipei Hsien 221, Taiwan, R.O.C.
Title
NB-RS690M_VIDEO/ CLOCK
Size A3
Document Number Yukon
Rev SA
Date: Thursday, July 03, 2008
Sheet 12 of 43

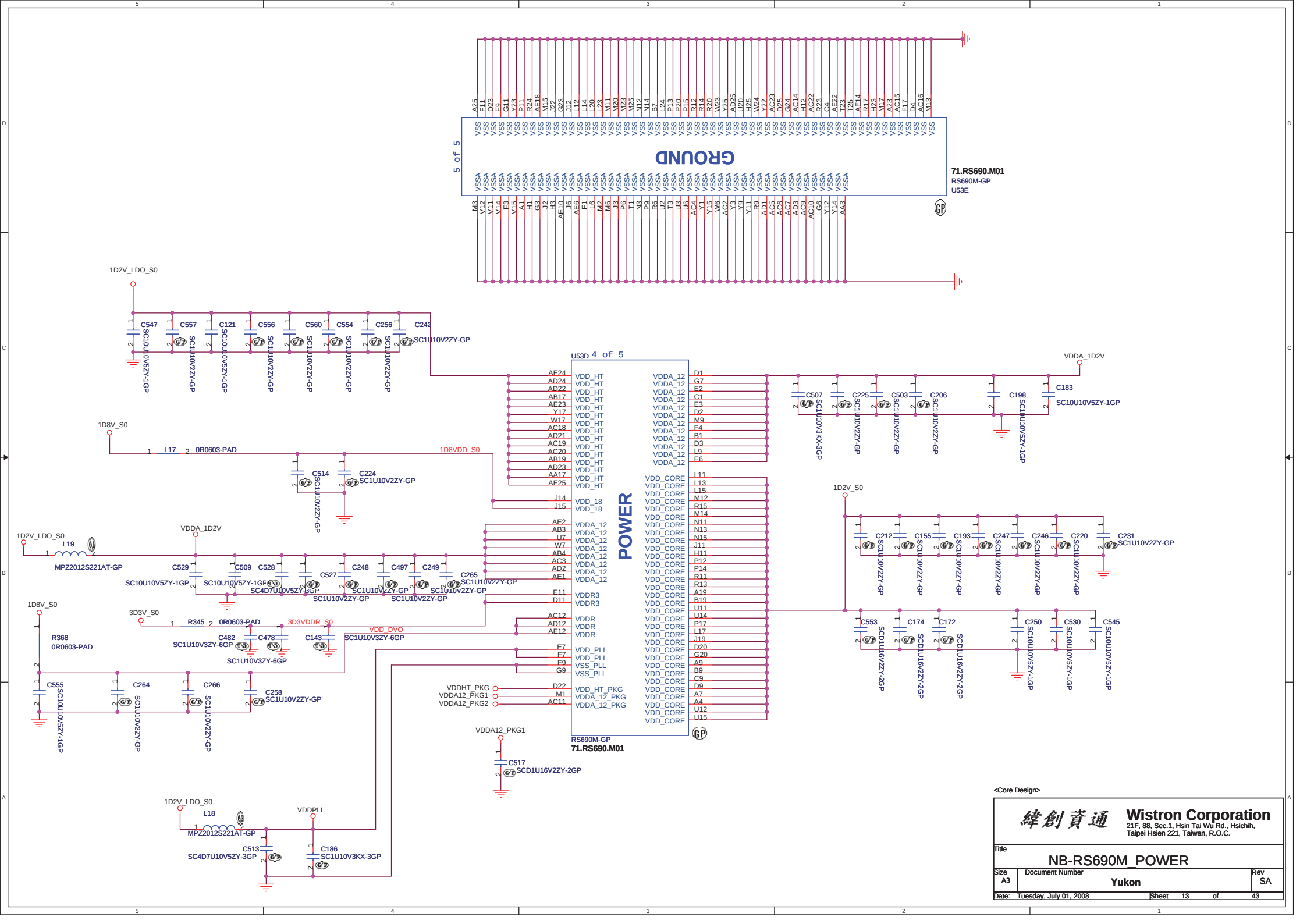

<Core Design>

Wistron Corporation
21F, 88, Sec.1, Hsin Tai Wu Rd., Hsichih,
Taipei Hsien 221, Taiwan, R.O.C.

Title: NB-RS690M_POWER

Size	Document Number	Rev
A3	Yukon	SA

Date: Tuesday, July 01, 2008 Sheet 13 of 43

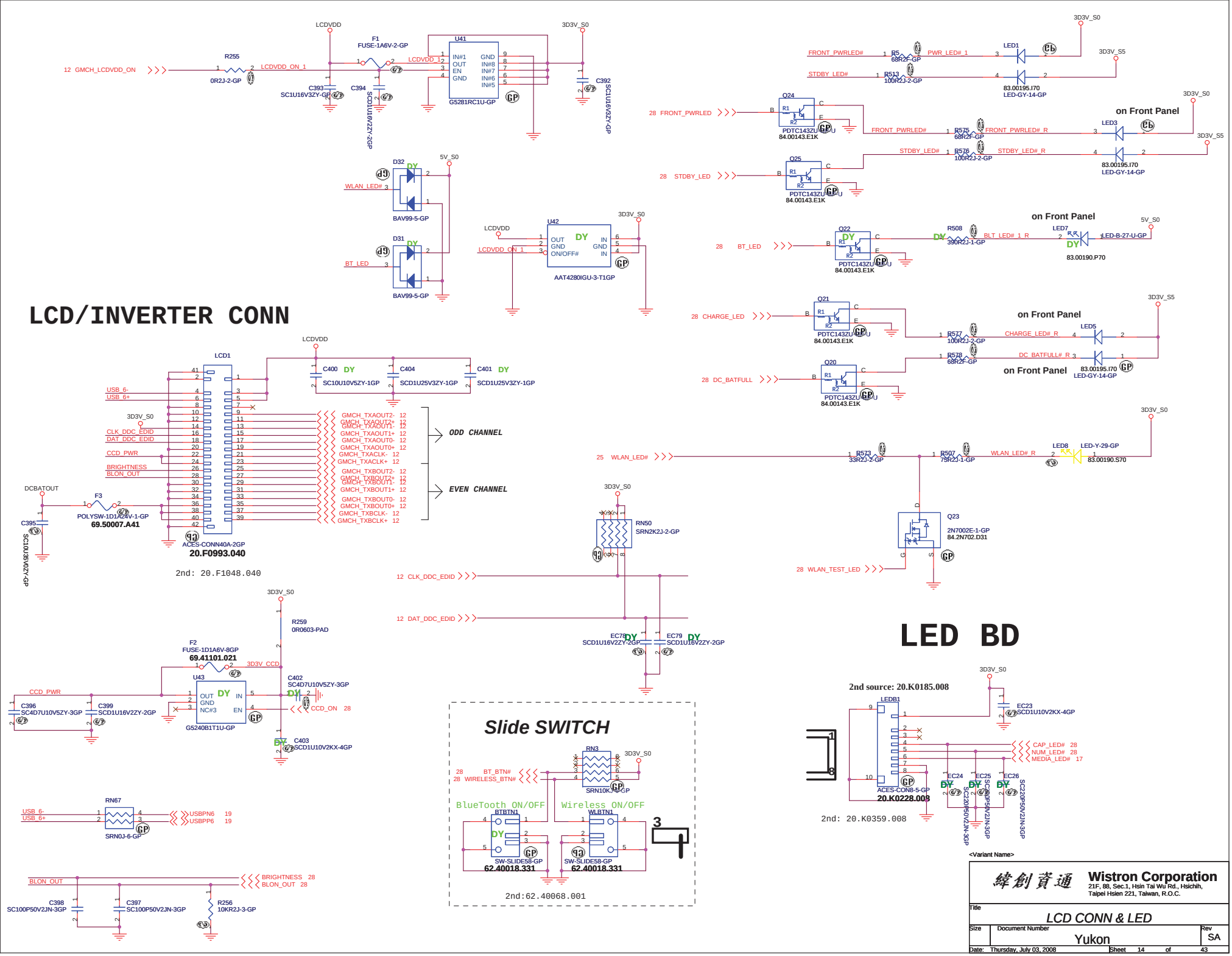
LCD/INVERTER CONN
LED BD
Slide SWITCH
LCDVDD
3D3V_S0
5V_S0
3D3V_S5
12 GMCH_LCDVDD_ON
R255
0R2J-2-GP
LCDVDD_ON_1
F1
FUSE-1A6V-2-GP
U41
G5281RC1U-GP
C393
SC1U16V3ZY-GP
C394
SCD1U16V2ZY-2GP
C392
SC1U16V3ZY-GP
D32
BAV99-5-GP
WLAN_LED#
D31
BAV99-5-GP
BT_LED
U42
AAT4280IGU-3-T1GP
FRONT_PWRLED#
R5
68R2F-GP
PWR_LED#_1
LED1
STDBY_LED#
R513
100R2J-2-GP
83.00195.I70
LED-GY-14-GP
28 FRONT_PWRLED
Q24
PDTC143ZU
84.00143.E1K
on Front Panel
R575
68R2F-GP
FRONT_PWRLED#_R
LED3
STDBY_LED#_R
R576
100R2J-2-GP
28 STDBY_LED
Q25
28 BT_LED
Q22
R508
390R2J-1-GP
BLT_LED#_1_R
LED7
LED-B-27-U-GP
83.00190.P70
28 CHARGE_LED
Q21
R577
100R2J-2-GP
CHARGE_LED#_R
LED5
28 DC_BATFULL
Q20
R578
68R2F-GP
DC_BATFULL#_R
83.00195.I70
LED-GY-14-GP
LCD1
ACES-CONN40A-2GP
20.F0993.040
2nd: 20.F1048.040
C400
SC10U10V5ZY-1GP
C404
SCD1U25V3ZY-1GP
C401
SCD1U25V3ZY-1GP
USB_6-
USB_6+
CLK_DDC_EDID
DAT_DDC_EDID
CCD_PWR
BRIGHTNESS
BLON_OUT
GMCH_TXAOUT2-
GMCH_TXAOUT2+
GMCH_TXAOUT1-
GMCH_TXAOUT1+
GMCH_TXAOUT0-
GMCH_TXAOUT0+
GMCH_TXACLK-
GMCH_TXACLK+
GMCH_TXBOUT2-
GMCH_TXBOUT2+
GMCH_TXBOUT1-
GMCH_TXBOUT1+
GMCH_TXBOUT0-
GMCH_TXBOUT0+
GMCH_TXBCLK-
GMCH_TXBCLK+
ODD CHANNEL
EVEN CHANNEL
DCBATOUT
F3
POLYSW-1D1A24V-1-GP
69.50007.A41
C395
SC1U16V3ZY-GP
25 WLAN_LED#
R573
33R2J-2-GP
R507
75R2J-1-GP
WLAN_LED#_R
LED8
LED-Y-29-GP
83.00190.S70
Q23
2N7002E-1-GP
84.2N702.D31
28 WLAN_TEST_LED
RN50
SRN2K2J-2-GP
12 CLK_DDC_EDID
12 DAT_DDC_EDID
EC78
SCD1U16V2ZY-2GP
EC79
SCD1U16V2ZY-2GP
R259
0R0603-PAD
F2
FUSE-1D1A6V-8GP
69.41101.021
3D3V_CCD
U43
G5240B1T1U-GP
C402
SC4D7U10V5ZY-3GP
CCD_ON 28
C396
SC4D7U10V5ZY-3GP
C399
SCD1U16V2ZY-2GP
C403
SCD1U10V2KX-4GP
RN67
SRN0J-6-GP
USBPN6 19
USBPP6 19
BLON_OUT
BRIGHTNESS 28
BLON_OUT 28
C398
SC100P50V2JN-3GP
C397
SC100P50V2JN-3GP
R256
10KR2J-3-GP
RN3
SRN10KJ-5-GP
28 BT_BTN#
28 WIRELESS_BTN#
BlueTooth ON/OFF
Wireless ON/OFF
BTBTN1
WLBTN1
SW-SLIDE58-GP
62.40018.331
2nd:62.40068.001
2nd source: 20.K0185.008
LEDB1
ACES-CON8-5-GP
20.K0228.008
2nd: 20.K0359.008
EC23
SCD1U10V2KX-4GP
CAP_LED# 28
NUM_LED# 28
MEDIA_LED# 17
EC24
EC25
EC26
SC220P50V2JN-3GP
<Variant Name>
Wistron Corporation
21F, 88, Sec.1, Hsin Tai Wu Rd., Hsichih,
Taipei Hsien 221, Taiwan, R.O.C.
Title
LCD CONN & LED
Size
Document Number
Yukon
Rev
SA
Date: Thursday, July 03, 2008
Sheet 14 of 43

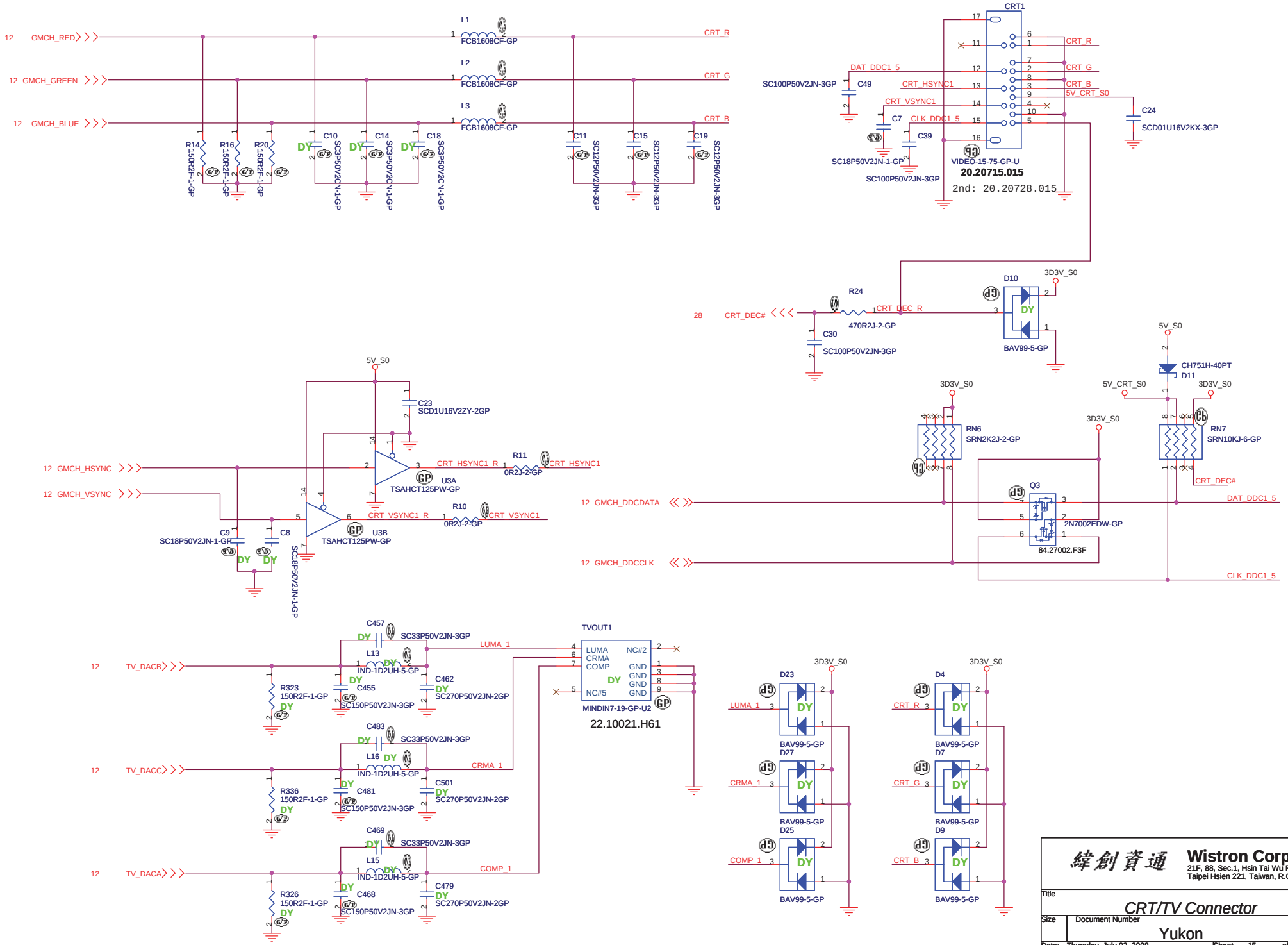

緯創資通 **Wistron Corporation**
21F, 88, Sec.1, Hsin Tai Wu Rd., Hsichih,
Taipei Hsien 221, Taiwan, R.O.C.

Title	*CRT/TV Connector*	
Size	Document Number: Yukon	Rev: SA
Date: Thursday, July 03, 2008	Sheet 15 of 43	

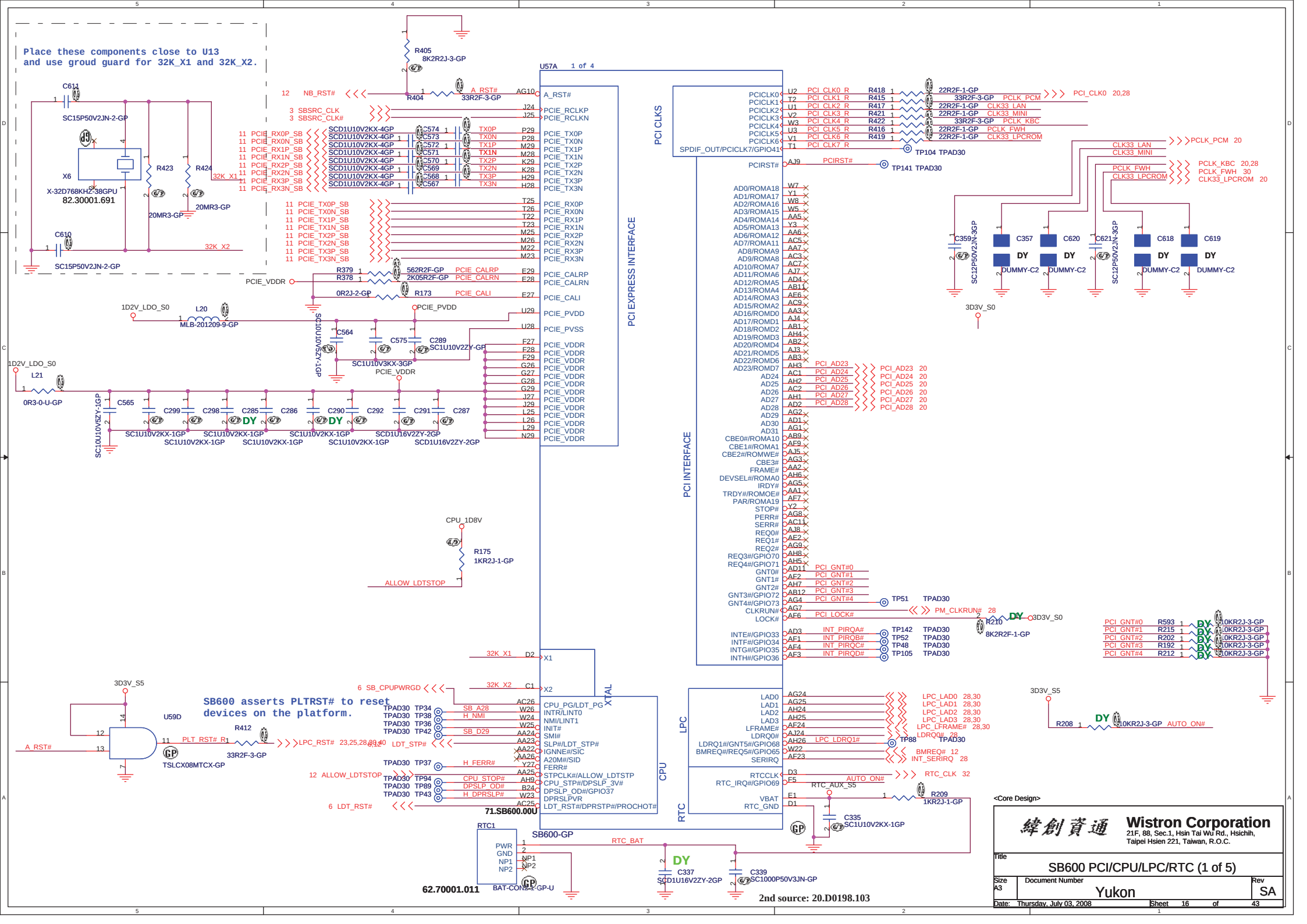
Place these components close to U13
and use groud guard for 32K_X1 and 32K_X2.
U57A 1 of 4
PCI CLKS
PCI EXPRESS INTERFACE
PCI INTERFACE
XTAL
CPU
LPC
RTC
SB600-GP
SB600 asserts PLTRST# to reset
devices on the platform.
71.SB600.00U
62.70001.011
2nd source: 20.D0198.103
Wistron Corporation
21F, 88, Sec.1, Hsin Tai Wu Rd., Hsichih,
Taipei Hsien 221, Taiwan, R.O.C.
Title
SB600 PCI/CPU/LPC/RTC (1 of 5)
Size A3
Document Number
Yukon
Rev SA
Date: Thursday, July 03, 2008
Sheet 16 of 43

PLACE SATA AC DECOUPLING
CAPS CLOSE TO SB460

U57B 2 of 4

SATA_TXP0 / SATA_TXN0 — C586, C587 — SCD01U50V2KX-1GP — SATA_TXP0_SB / SATA_TXN0_SB — AH21, AJ21
SATA_RXN0 / SATA_RXP0 — C590, C593 — SCD01U50V2KX-1GP — SATA_RXN0_SB / SATA_RXP0_SB — AH20, AJ20
SATA_TXP1 / SATA_TXN1 — C710, C712 — SCD01U50V2KX-1GP — SATA_TXP1_SB / SATA_TXN1_SB — AH18, AJ18
SATA_RXN1 / SATA_RXP1 — C713, C711 — SCD01U50V2KX-1GP — SATA_RXN1_SB / SATA_RXP1_SB — AH17, AJ17

SERIAL ATA

SATA_TX0+ / SATA_TX0-
SATA_RX0- / SATA_RX0+
SATA_TX1+ / SATA_TX1-
SATA_RX1- / SATA_RX1+
SATA_TX2+ / SATA_TX2- — AH13, AH14
SATA_RX2- / SATA_RX2+ — AH16, AJ16
SATA_TX3+ / SATA_TX3- — AJ11, AH11
SATA_RX3- / SATA_RX3+ — AH12, AJ13
SATA_CAL — AF12
SATA_X1 — AD16
SATA_X2 — AD18
SATA_ACT#/GPIO67 — AC12 — 14 MEDIA_LED#

SATA

R397 1KR2F-3-GP
3D3V_S0
R191 10KR2J-3-GP

SATA

PLLVDD_ATA — AD14, AJ10 — PLLVDD_SATA
XTLVDD_ATA — AC16 — XTLVDD_SATA
AVDD_SATA — AE14, AE16, AE18, AE19, AF19, AF21, AG22, AG23, AH22, AH23, AJ12, AJ14, AJ19, AJ22, AJ23 — AVDD_SATA

SATA

SATA_X1
R381
SATA_X2
1MR2J-L2-GP
XTAL-25MHZ-67GP
C582 SC12P50V2JN-3GP
C576 SC10P50V2JN-4GP

According to PA_IXP600AD9
Change C936 and C937 from 27P to 10P.

AVSS_SATA — AB14, AB16, AB18, AC14, AC18, AC19, AD12, AD19, AD21, AE12, AE21, AF11, AF14, AF16, AF18, AG11, AG12, AG13, AG14, AG16, AG17, AG18, AG19, AG20, AG21, AH10, AH19

SERIAL ATA POWER

ATA 66/100

IDE_IORDY — AB29
IDE_IRQ — AA28
IDE_A0 — AA29
IDE_A1 — AB27
IDE_A2 — Y28
IDE_DACK# — AB26
IDE_DRQ — AC27
IDE_IOR# — AC29
IDE_IOW# — AC28
IDE_CS1# — W28
IDE_CS3# — W27
IDE_D0/GPIO15 — AD28
IDE_D1/GPIO16 — AD26
IDE_D2/GPIO17 — AE29
IDE_D3/GPIO18 — AF27
IDE_D4/GPIO19 — AG29
IDE_D5/GPIO20 — AH28
IDE_D6/GPIO21 — AJ28
IDE_D7/GPIO22 — AJ27
IDE_D8/GPIO23 — AH27
IDE_D9/GPIO24 — AG27
IDE_D10/GPIO25 — AG28
IDE_D11/GPIO26 — AF28
IDE_D12/GPIO27 — AE29
IDE_D13/GPIO28 — AE28
IDE_D14/GPIO29 — AD25
IDE_D15/GPIO30 — AD29

SPI ROM

SPI_DI/GPIO12 — J3 — TP54 TPAD30
SPI_DO/GPIO11 — J6 — TP45 TPAD30
SPI_CLK/GPIO47 — G3 — TP50 TPAD30
SPI_HOLD#/GPIO31 — G2 — TP101 TPAD30
SPI_CS#/GPIO32 — G6 — TP46 TPAD30
LAN_RST#/GPIO13 — C23 — TP41 TPAD30
ROM_RST#/GPIO14 — G5 — TP47 TPAD30

HW MONITOR

FANOUT0/GPIO3 — M4
FANOUT1/GPIO48 — T3
FANOUT2/GPIO49 — V4
FANIN0/GPIO50 — N3
FANIN1/GPIO51 — P2
FANIN2/GPIO52 — W4
TEMP_COMM — P5
TEMPIN0/GPIO61 — P7
TEMPIN1/GPIO62 — P8
TEMPIN2/GPIO63 — T8
TEMPIN3/TALERT#/GPIO64 — T7 — ALERT# 6,32
VIN0/GPIO53 — V5 — PSW_CLR#
VIN1/GPIO54 — L7 — UMA_DIS — TP143 TPAD30
VIN2/GPIO55 — M8 — CLK_ID
VIN3/GPIO56 — V6
VIN4/GPIO57 — M6 — FP_ID — TP144 TPAD30
VIN5/GPIO58 — P4
VIN6/GPIO59 — M7
VIN7/GPIO60 — V7

AVDD — N1
AVSS — M1

SB600-GP

3D3V_S0
R519 10KR2J-3-GP
PSW_CLR#
G41 GAP-OPEN

3D3V_S0
R197 10KR2J-3-GP
RTL
CLK_ID
R206 10KR2J-3-GP
ICS

REMOVE FP_DETECT TO KBC

AVDD_HWM
3D3V_S0
R432 0R3-0-U-GP
C613 SCD1U16V2ZY-2GP
C614 SC2D2U6D3V3KX-GP
DY

71.SB600.00U

SATA

3D3V_S0 — R187 0R0603-PAD — EC117 SCD1U16V2ZY-2GP
XTLVDD_ATA — C318 SC2D2U6D3V3KX-GP
1D2V_LDO_S0 — R193 0R0603-PAD — EC118 SCD1U16V2ZY-2GP
PLLVDD_ATA — C320 SC2D2U6D3V3KX-GP
1D2V_LDO_S0 — R177 0R0603-PAD — EC114 SCD1U16V2ZY-2GP
C311 SC10U6D3V5KX-1GP
AVDD_SATA — C307 SC10U6D3V5KX-1GP
EC63 SCD1U16V2ZY-2GP DY
EC65 SCD1U16V2ZY-2GP DY
EC62 SCD1U16V2ZY-2GP DY
EC60 SCD1U16V2ZY-2GP DY
EC64 SCD1U16V2ZY-2GP

<Core Design>

Wistron Corporation
21F, 88, Sec.1, Hsin Tai Wu Rd., Hsichih,
Taipei Hsien 221, Taiwan, R.O.C.

Title: SB600 ACPI/GPIO/SATA/IDE (2 of 5)
Size: A3 | Document Number: Yukon | Rev: SA
Date: Thursday, July 03, 2008 | Sheet 17 of 43

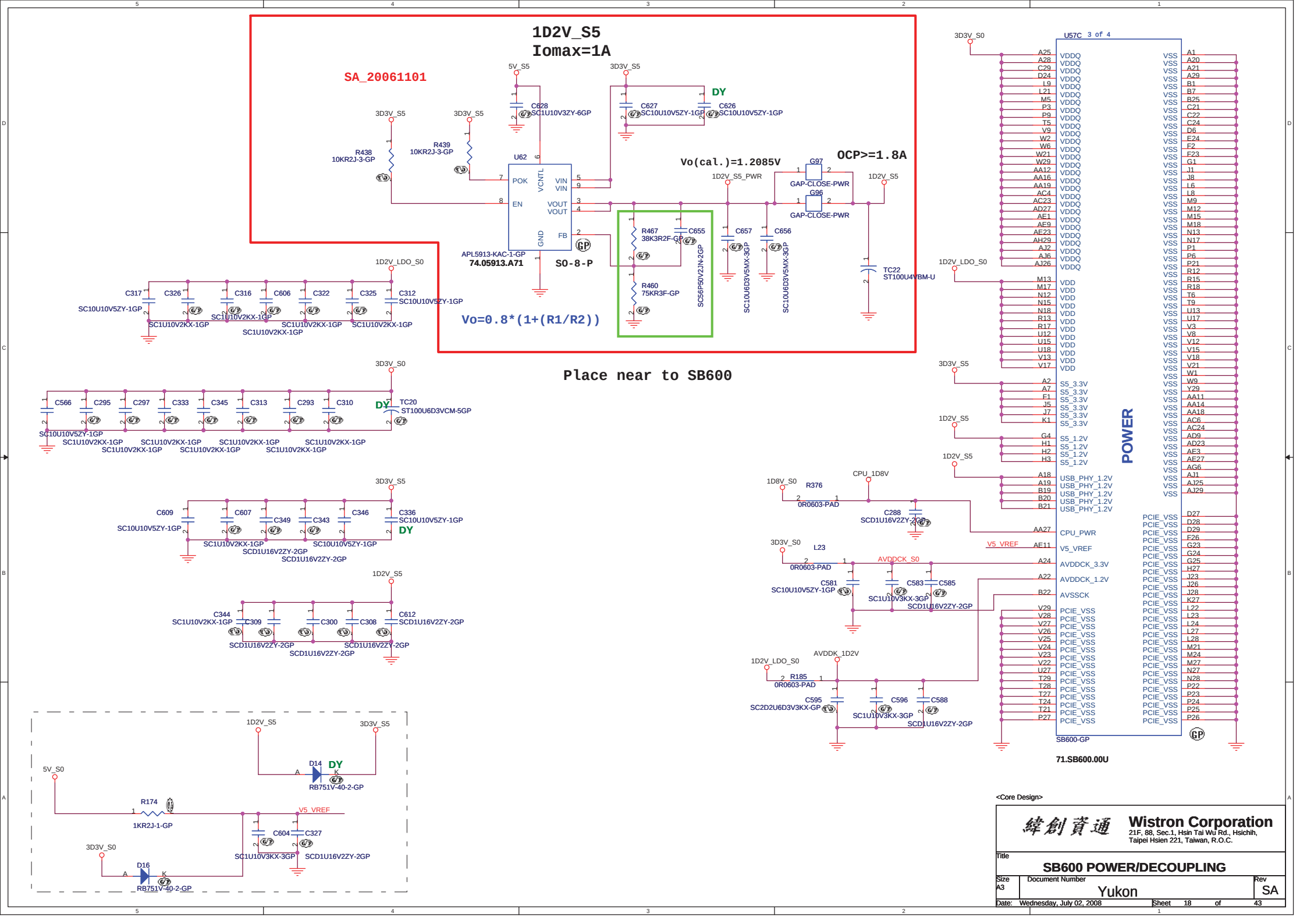

<Core Design>

Wistron Corporation
21F, 88, Sec.1, Hsin Tai Wu Rd., Hsichih,
Taipei Hsien 221, Taiwan, R.O.C.

Title: SB600 POWER/DECOUPLING

Size: A3 | Document Number: Yukon | Rev: SA

Date: Wednesday, July 02, 2008 | Sheet 18 of 43

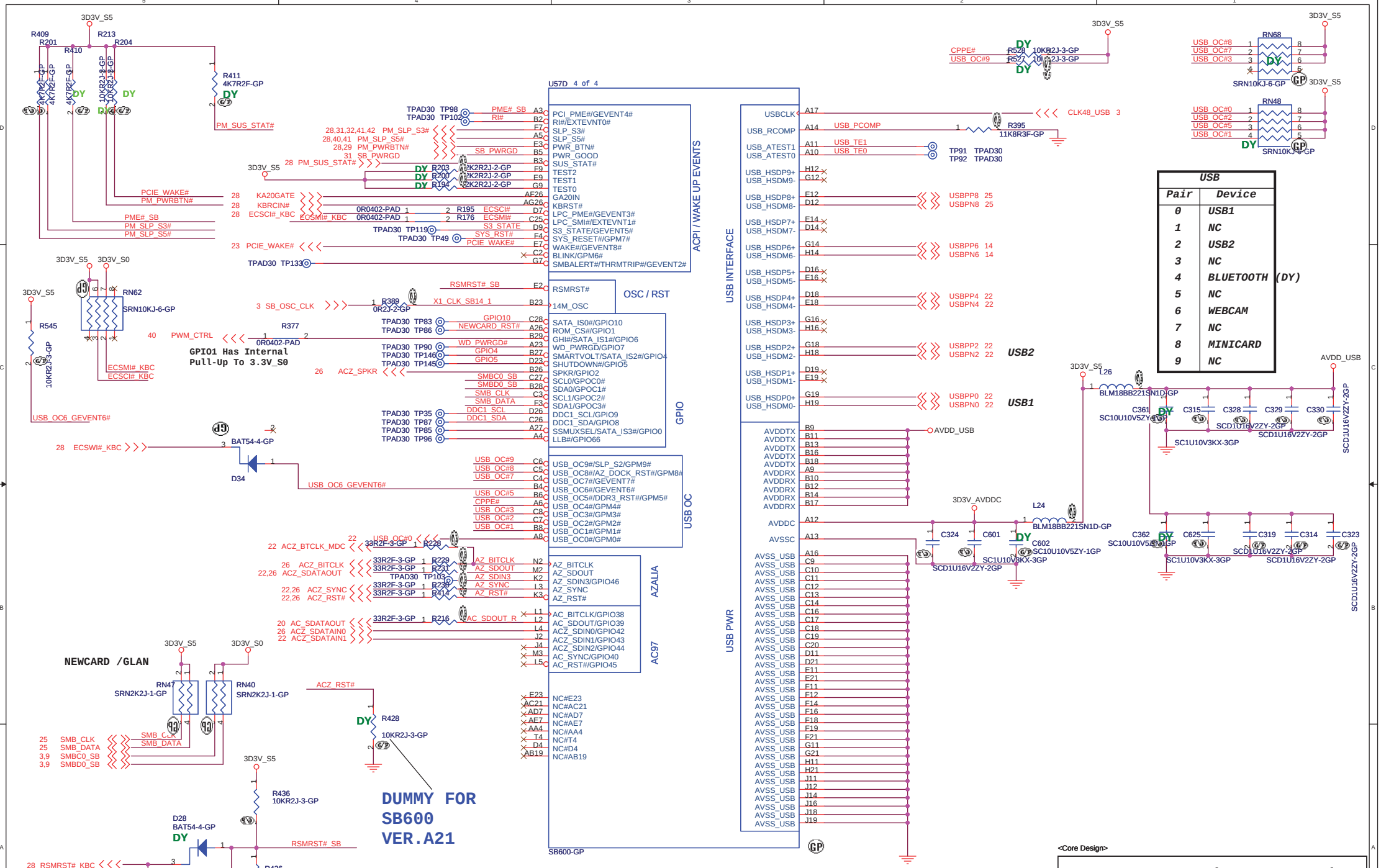

USB	
Pair	Device
0	USB1
1	NC
2	USB2
3	NC
4	BLUETOOTH (DY)
5	NC
6	WEBCAM
7	NC
8	MINICARD
9	NC

<Core Design>

Wistron Corporation
21F, 88, Sec.1, Hsin Tai Wu Rd., Hsichih, Taipei Hsien 221, Taiwan, R.O.C.

Title: SB600 AC97/USB

Size: A3 | Document Number: Yukon | Rev: SA

Date: Thursday, July 03, 2008 | Sheet 19 of 43

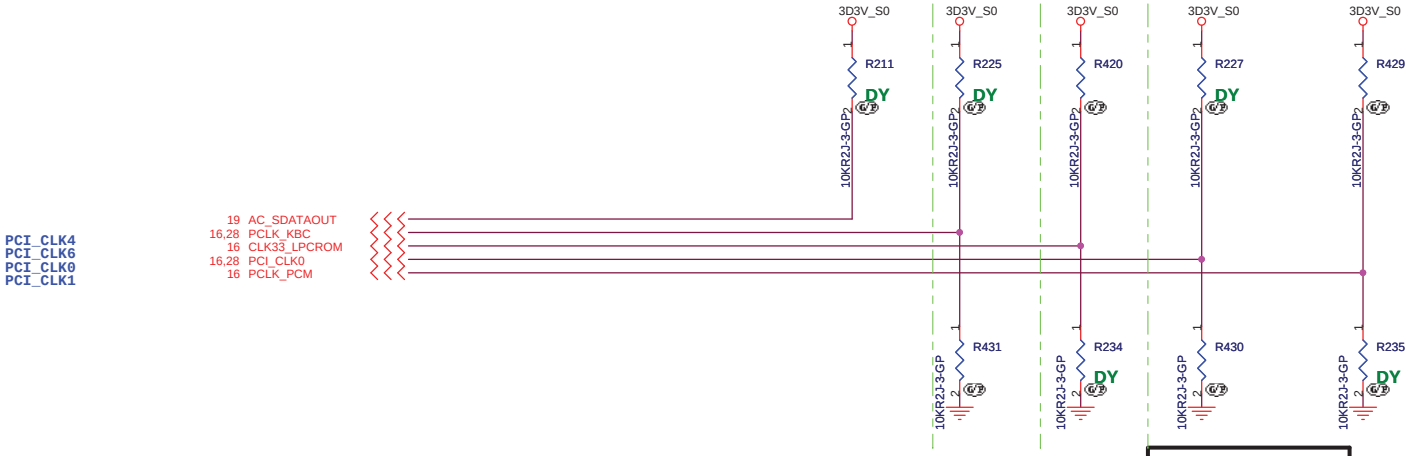

REQUIRED SYSTEM STRAPS

	AC_SDOUT	PCI_CLK4	PCI_CLK6	SB600 PCI_CLK0	SB600 PCI_CLK1
PULL HIGH	USE DEBUG STRAPS	USE INT. PLL48	CPU IF=K8 DEFAULT	ROM TYPE: H, H = PCI ROM	
PULL LOW	IGNORE DEBUG STRAPS DEFAULT	USE EXT. 48MHZ DEFAULT	CPU IF=P4	H, L = SPI ROM L, H = LPC ROM DEFAULT L, L = FWH ROM	

SB600 HAS 15K INTERNAL PU FOR PCI_AD[23..28]

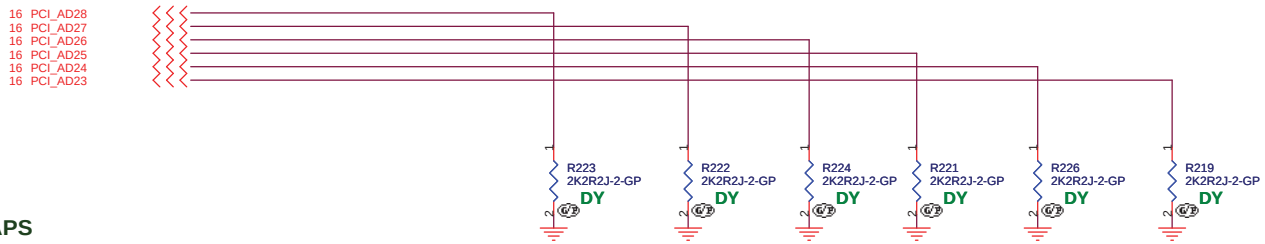

DEBUG STRAPS

		PCI_AD31	PCI_AD30	PCI_AD29	PCI_AD28	PCI_AD27	PCI_AD26	PCI_AD25	PCI_AD24	PCI_AD23
STRAP HIGH		RESERVED	RESERVED	RESERVED	USE LONG RESET DEFAULT	USE PCI PLL DEFAULT	USE ACPI BCLK DEFAULT	USE IDE PLL DEFAULT	USE DEFAULT PCIE STRAPS DEFAULT	BOOT FAIL TIMER DISABLE DEFAULT
STRAP LOW					USE SHORT RESET	BYPASS PCI PLL	BYPASS ACPI BCLK	BYPASS IDE PLL	USE EEPROM PCIE STRAPS	BOOT FAIL TIMER ENABLE

<Core Design>

緯創資通 Wistron Corporation
21F, 88, Sec.1, Hsin Tai Wu Rd., Hsichih,
Taipei Hsien 221, Taiwan, R.O.C.

Title: **SB600 STRAPPING PIN**

Size: A3 | Document Number: Yukon | Rev: SA

Date: Thursday, July 03, 2008 | Sheet 20 of 43

SATA HD Connector

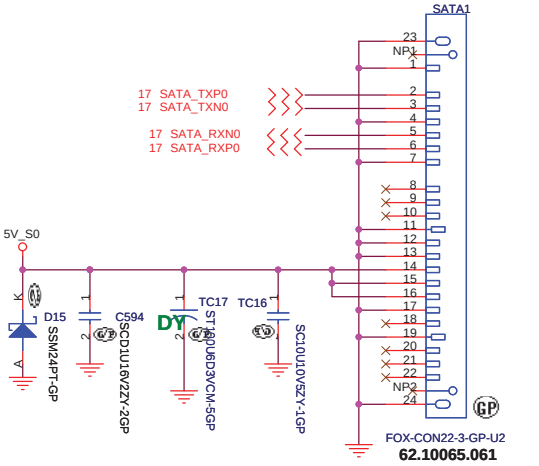

2nd: 62.10065.091

SATA ODD Connector

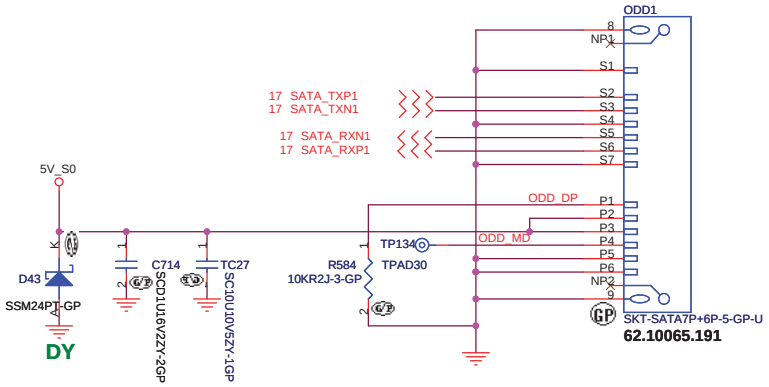

bom1

緯創資通	**Wistron Corporation** 21F, 88, Sec.1, Hsin Tai Wu Rd., Hsichih, Taipei Hsien 221, Taiwan, R.O.C.	
Title	***HDD and CDROM***	
Size	Document Number **Yukon**	Rev SA
Date: Thursday, July 03, 2008	Sheet 21 of 43	

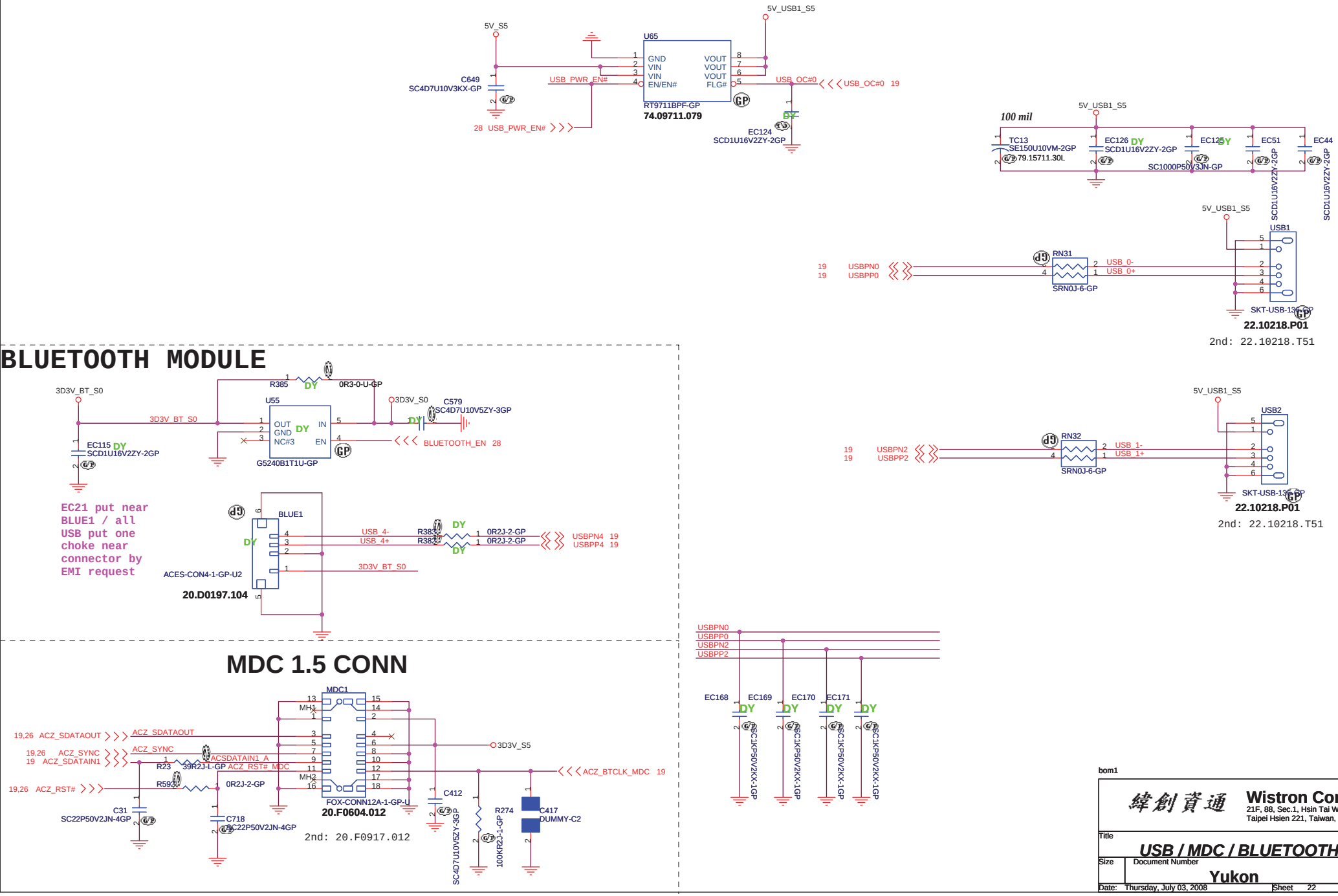

bom1

Wistron Corporation
21F, 88, Sec.1, Hsin Tai Wu Rd., Hsichih,
Taipei Hsien 221, Taiwan, R.O.C.

Title: USB / MDC / BLUETOOTH

Size | Document Number: Yukon | Rev: SA

Date: Thursday, July 03, 2008 | Sheet 22 of 43

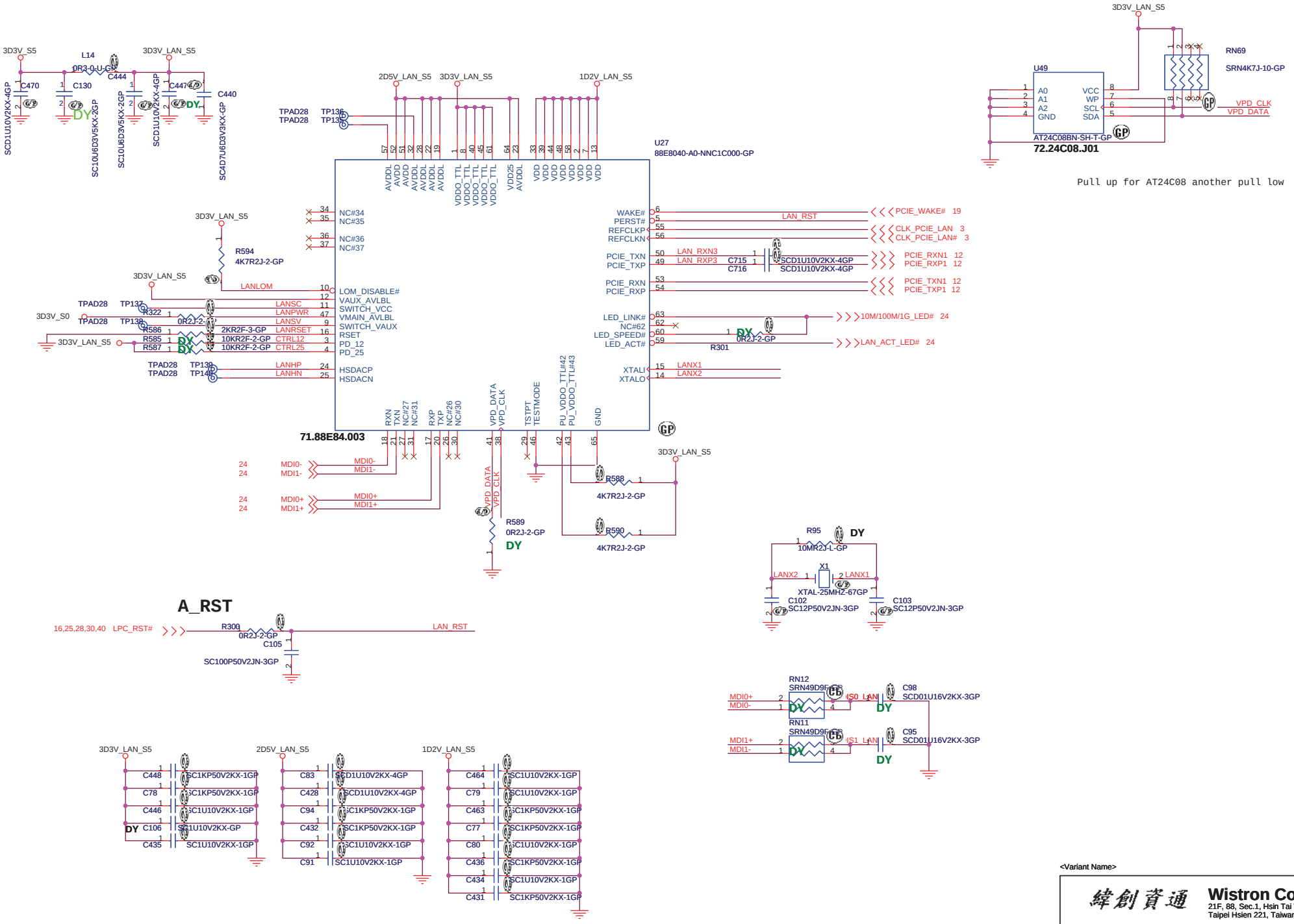

<Variant Name>

Wistron Corporation
21F, 88, Sec.1, Hsin Tai Wu Rd., Hsichih,
Taipei Hsien 221, Taiwan, R.O.C.

Title: **MARVELL 88E8040**

Size: A3 | Document Number: Yukon | Rev: SA

Date: Thursday, July 03, 2008 | Sheet 23 of 43

LAN Connector

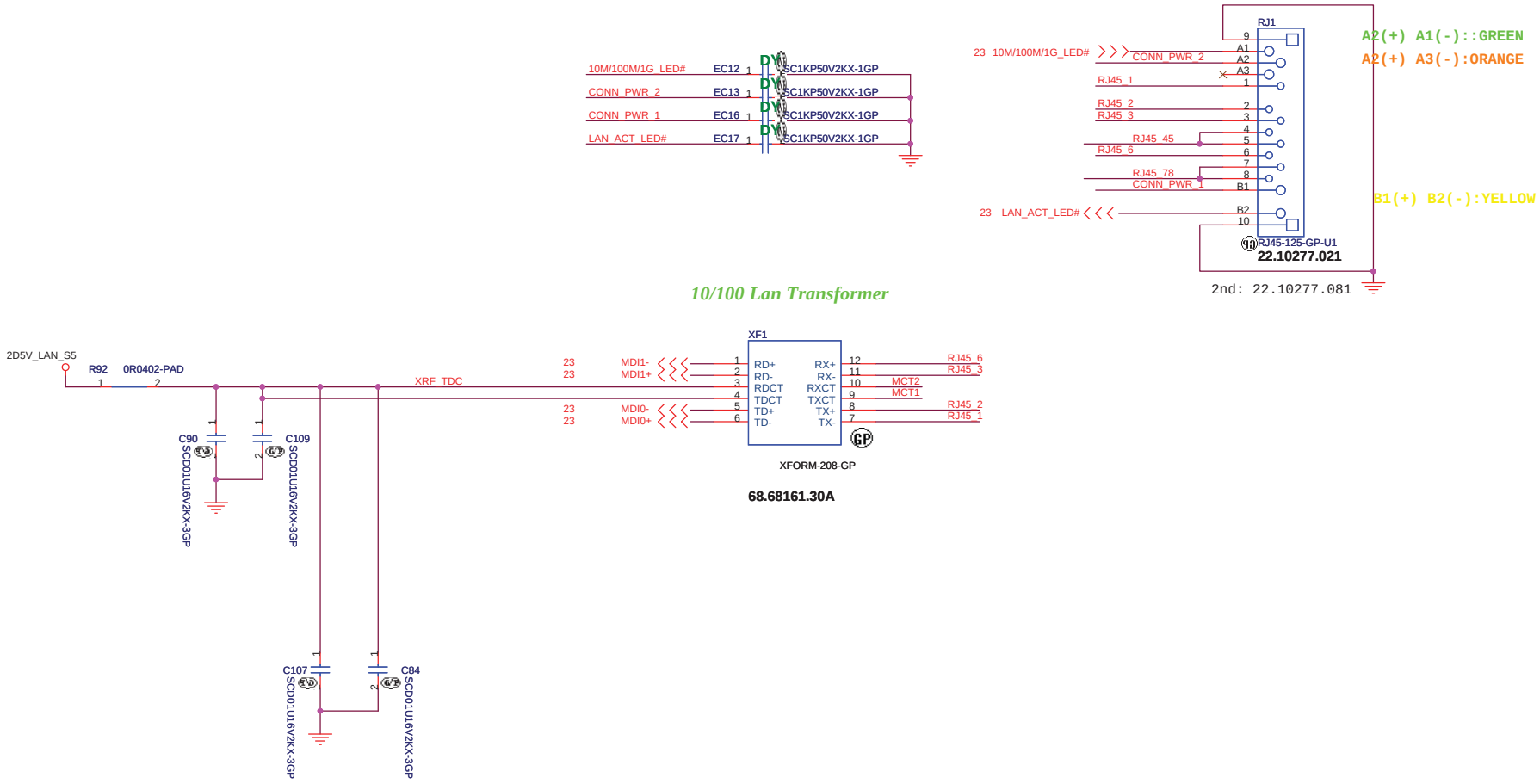

1.route on bottom as differential pairs.
2.Tx+/Tx- are pairs. Rx+/Rx- are pairs.
3.No vias, No 90 degree bends.
4.pairs must be equal lengths.
5.6mil trace width,12mil separation.
6.36mil between pairs and any other trace.
7.Must not cross ground moat,except RJ-45 moat.

RJ11 signal must leave the other signal or power plane 100mil.

DOC_TIP,DOC_RING,TIP,RING:
W/S : 10/100 @ Surface layers
10/20 @ Inner layers

10/100 LAN Transformer	RJ45 PIN
TD+ --> TX+	RJ45-1
TD- --> TX-	RJ45-2
RD+ --> RX+	RJ45-3
RD- --> RX-	RJ45-6

<Variant Name>

緯創資通 **Wistron Corporation**
21F, 88, Sec.1, Hsin Tai Wu Rd., Hsichih,
Taipei Hsien 221, Taiwan, R.O.C.

Title: **LAN Connector**

Size: A3 | Document Number: **Yukon** | Rev: **SA**

Date: Thursday, July 03, 2008 | Sheet 24 of 43

Mini Card Connector

NEWCARD Connector

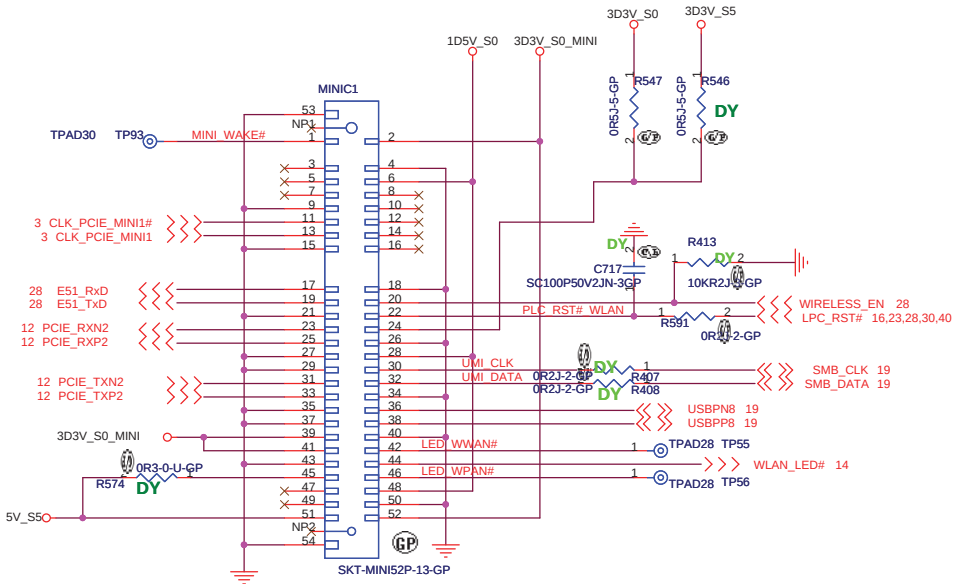

62.10043.461

2nd:20.F1049.052

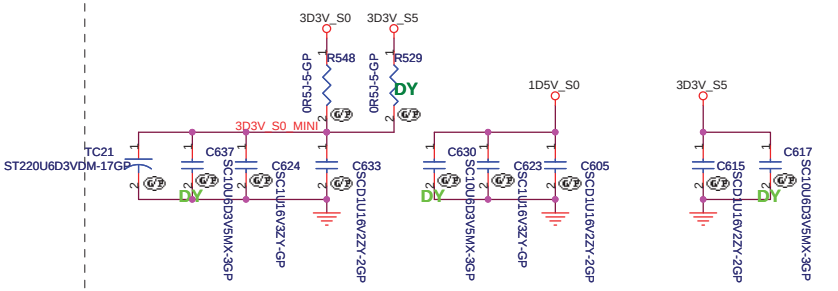

Place near MINIC1

bom1

緯創資通	**Wistron Corporation** 21F, 88, Sec.1, Hsin Tai Wu Rd., Hsichih, Taipei Hsien 221, Taiwan, R.O.C.	
Title	***MINI CARD / NEW CARD***	
Size	Document Number **Yukon**	Rev SA
Date: Thursday, July 03, 2008	Sheet 25 of 43	

POWER GENERATE

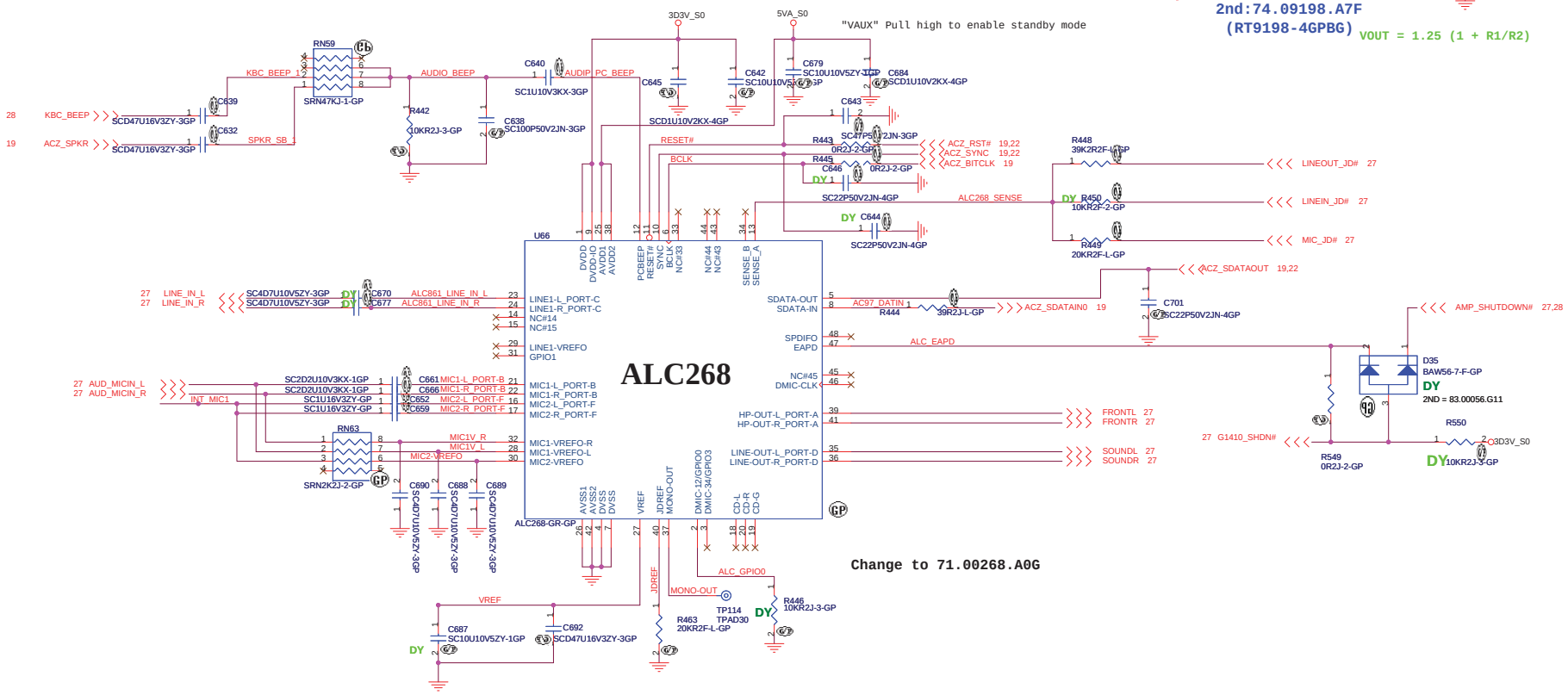

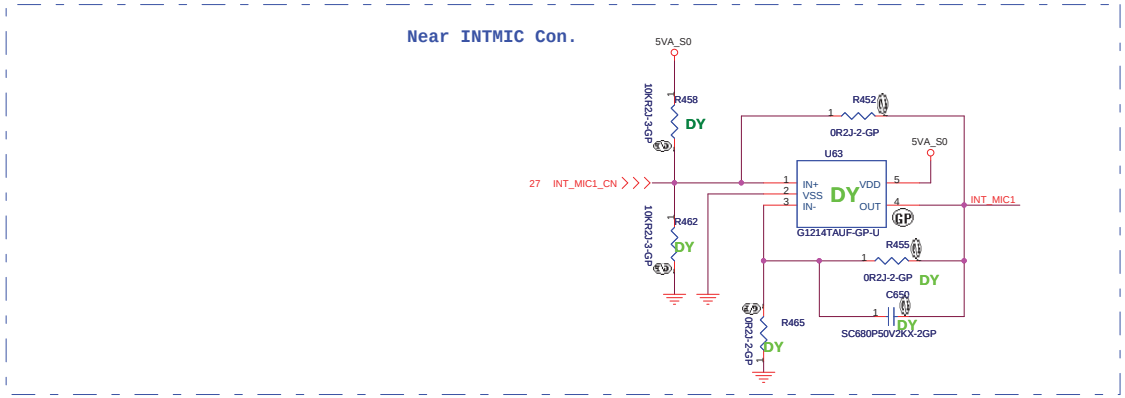

<Variant Name>

緯創資通 **Wistron Corporation**
21F, 88, Sec.1, Hsin Tai Wu Rd., Hsichih,
Taipei Hsien 221, Taiwan, R.O.C.

Title: *AZALIA CODEC - ALC268*

Size	Document Number	Rev
	Yukon	SA

Date: Thursday, July 03, 2008 Sheet 26 of 43

AUDIO OP AMPLIFIER

KBC_MUTE_GPIO8

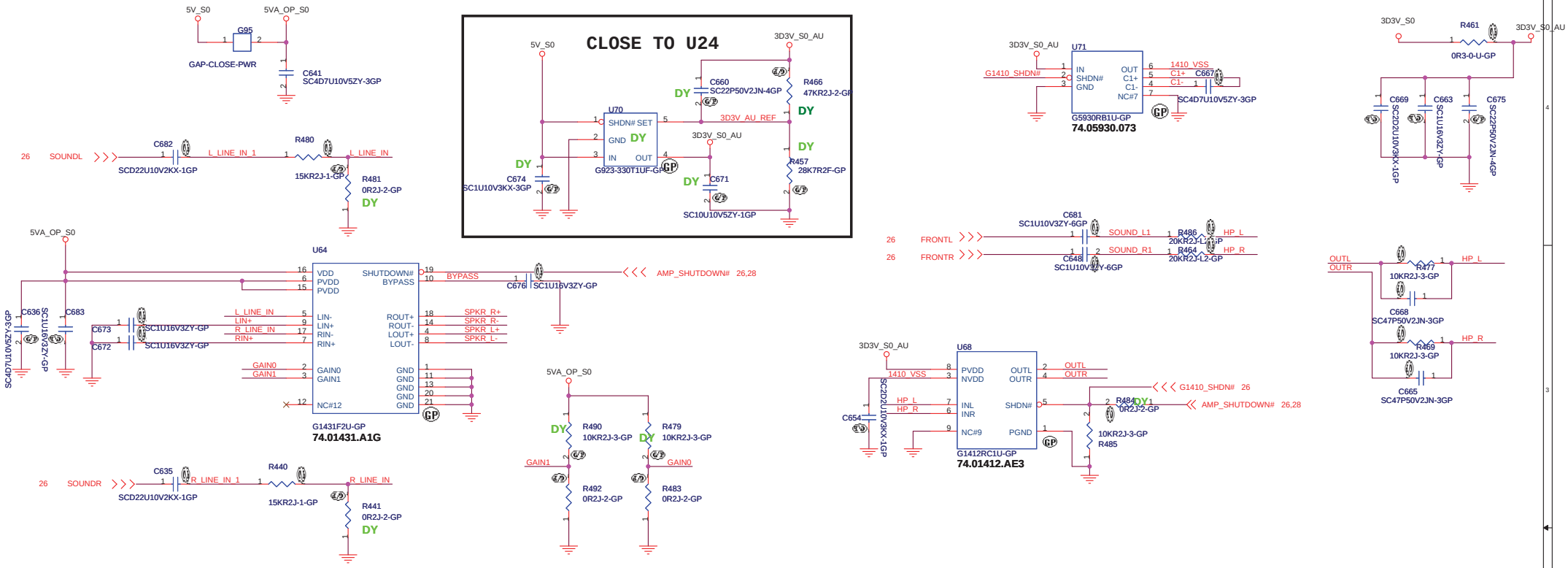

LINE IN

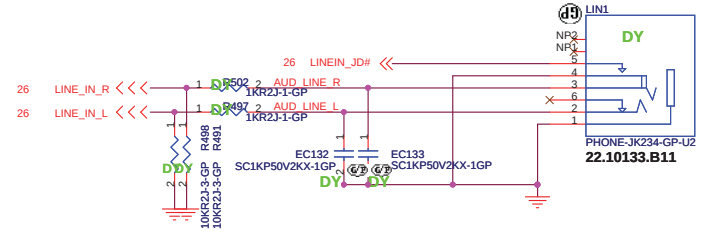

Internal Microphone

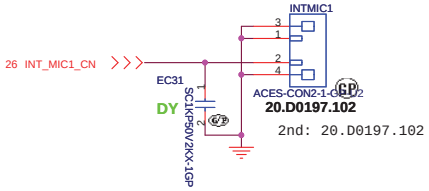

Internal Speaker

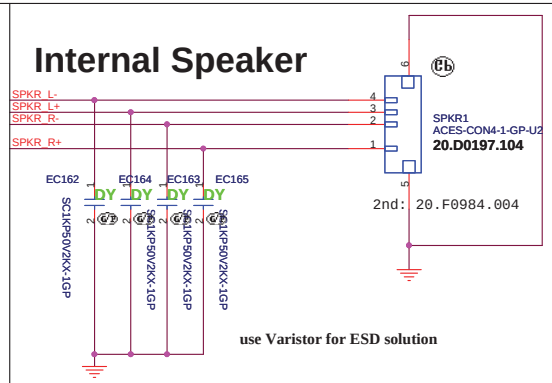

MIC IN

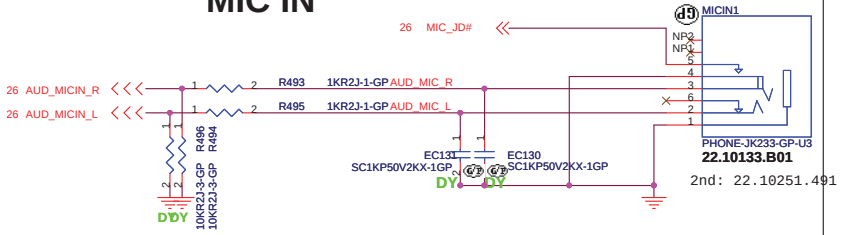

LINE OUT

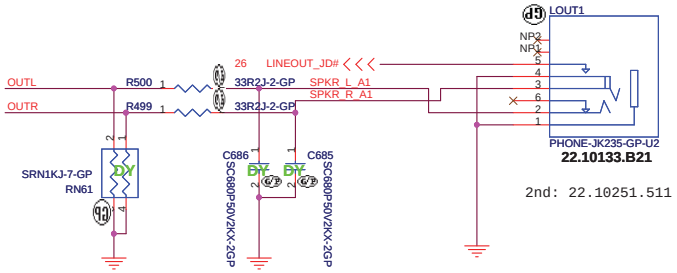

<Variant Name>

緯創資通 Wistron Corporation
21F, 88, Sec.1, Hsin Tai Wu Rd., Hsichih,
Taipei Hsien 221, Taiwan, R.O.C.

Title: AUDIO AMP AND JACK

Size | Document Number: Yukon | Rev: SA

Date: Thursday, July 03, 2008 | Sheet 27 of 43

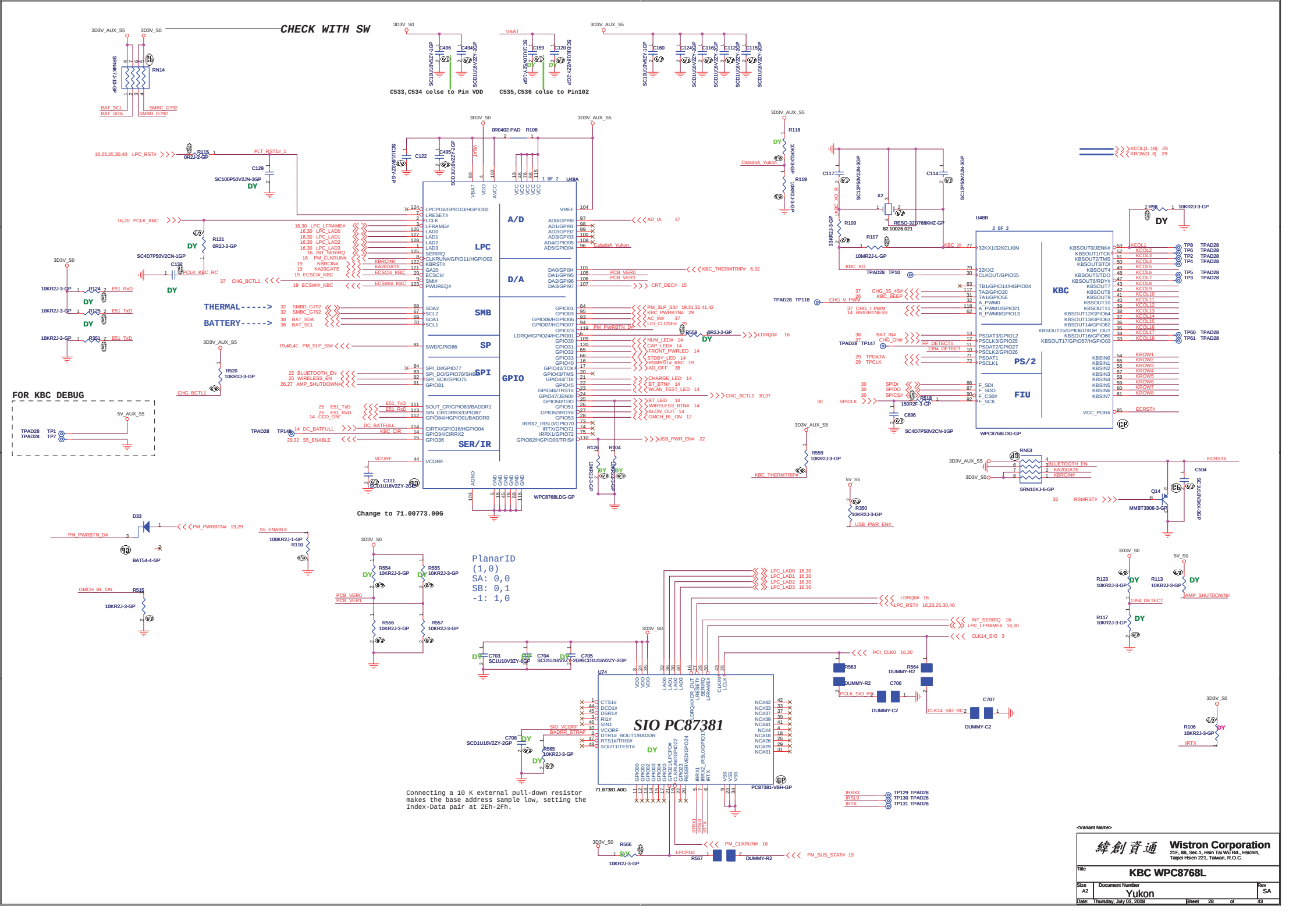
CHECK WITH SW
C533,C534 colse to Pin VDD
C535,C536 colse to Pin102
U48A
WPC8768LDG-GP
A/D
D/A
LPC
SMB
SP
SPI
GPIO
SER/IR
U48B
KBC
PS/2
FIU
Change to 71.00773.00G
FOR KBC DEBUG
THERMAL----->
BATTERY----->
PlanarID
(1,0)
SA: 0,0
SB: 0,1
-1: 1,0
SIO PC87381
PC87381-VBH-GP
Connecting a 10 K external pull-down resistor makes the base address sample low, setting the Index-Data pair at 2Eh-2Fh.
Wistron Corporation
21F, 88, Sec.1, Hsin Tai Wu Rd., Hsichih, Taipei Hsien 221, Taiwan, R.O.C.
KBC WPC8768L
Yukon
Size A2
Rev SA
Date: Thursday, July 03, 2008
Sheet 28 of 43

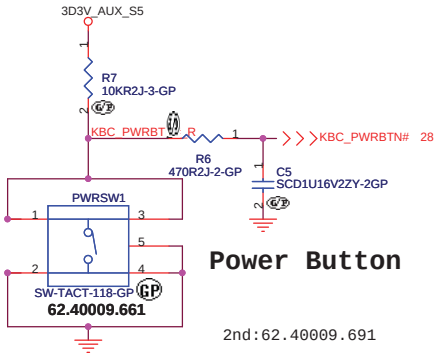

Power Button

2nd:62.40009.691

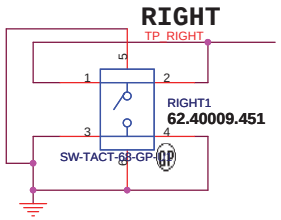

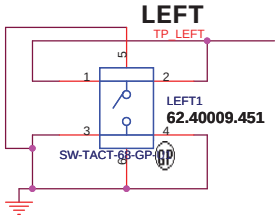

Cover Up Switch

2nd source:20.F00984.002

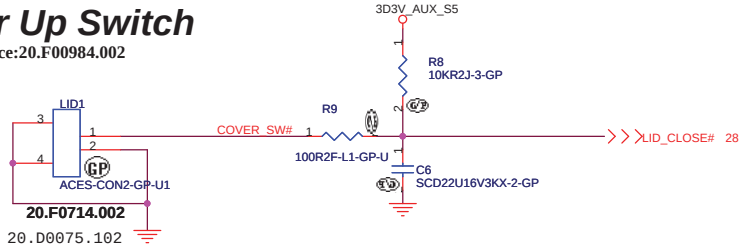

2nd: 20.D0075.102

Check test point

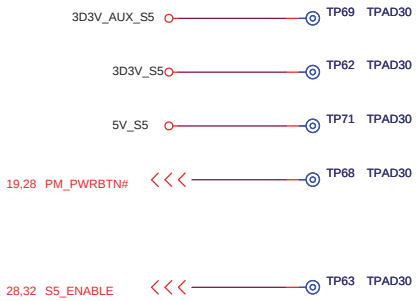

Test Point放在Dimm Door打開可量測處

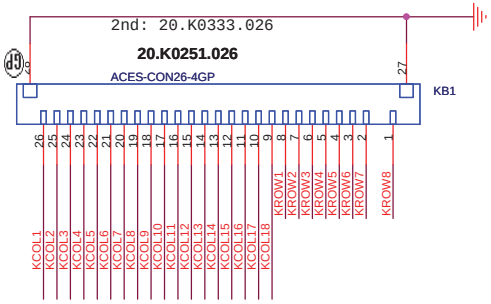

Internal KeyBoard CONN

1 25

CHECK KB SPEC. AND PIN DEFINE

EMI Bypass cap.

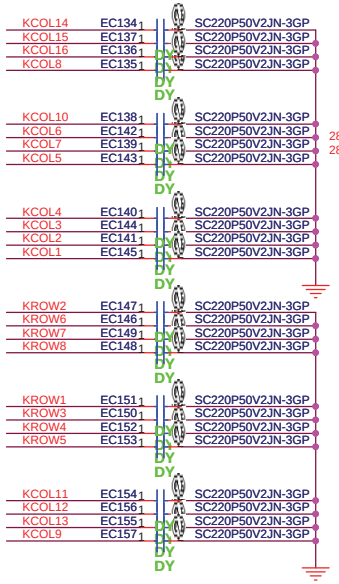

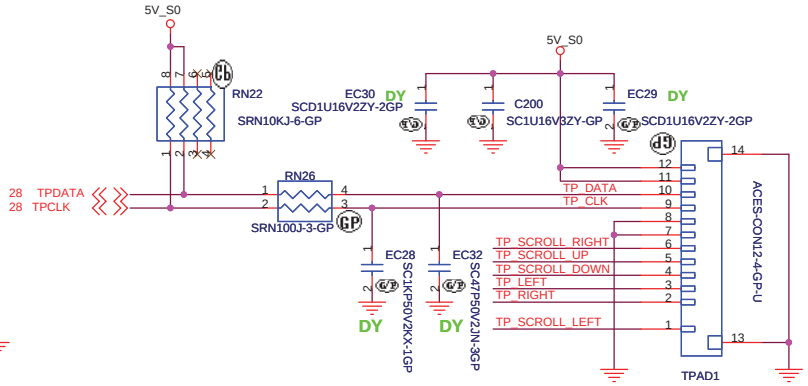

2nd: 20.K0359.012

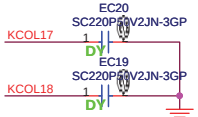

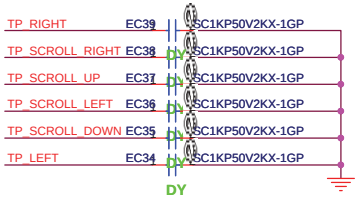

KROW[1..8] KROW[1..8] 28

KCOL[1..18] KCOL[1..18] 28

bom1

緯創資通 **Wistron Corporation**
21F, 88, Sec.1, Hsin Tai Wu Rd., Hsichih,
Taipei Hsien 221, Taiwan, R.O.C.

Title	BUTTONs / KB / TOUCHPAD
Size	
Document Number	Yukon
Rev	SA
Date: Thursday, July 03, 2008	Sheet 29 of 43

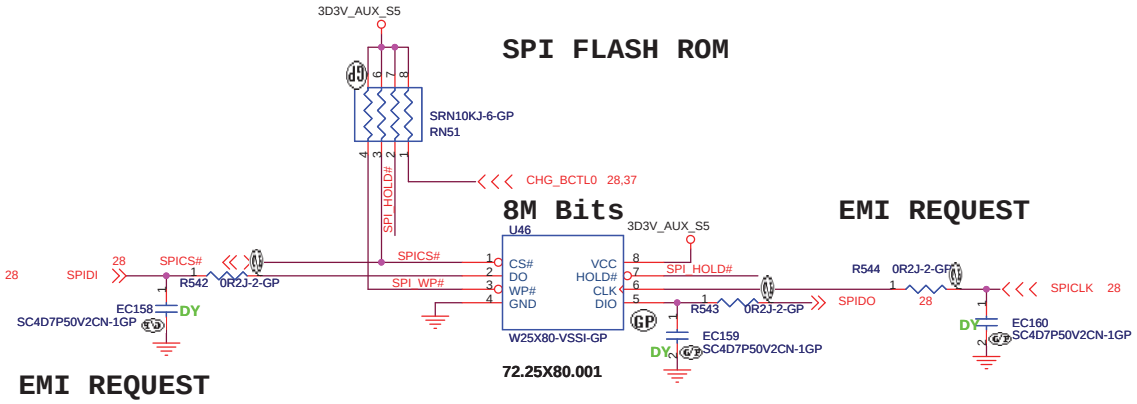

EMI REQUEST

GOLDEN FINGER FOR DEBUG BOARD

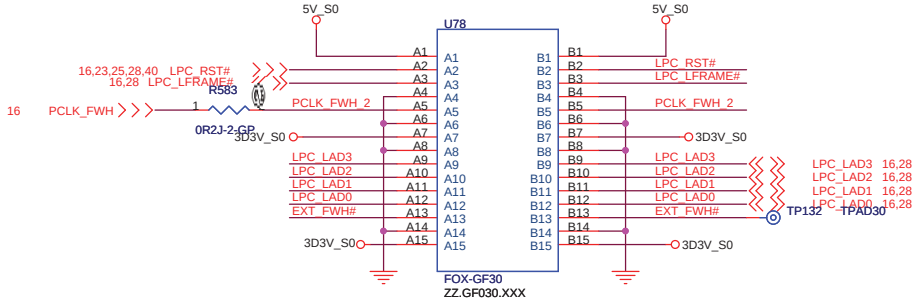

TOP VIEW

A15	(B1)
A14	(B2)
⋮	⋮
A2	(B14)
A1	(B15)

(BOTTOM VIEW)

```
Boot Device must have ID[3:0] = 0000
Has internal pull-down resistors
All may be left floated
FPET7 Elec. P3-46
```

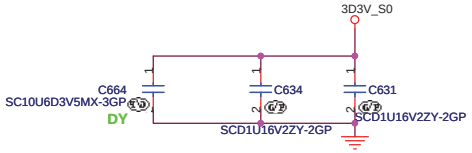

<Core Design>

緯創資通 Wistron Corporation
21F, 88, Sec.1, Hsin Tai Wu Rd., Hsichih,
Taipei Hsien 221, Taiwan, R.O.C.

Title		
BIOS		
Size A3	Document Number Yukon	Rev SA
Date: Thursday, July 03, 2008	Sheet 30 of 43	

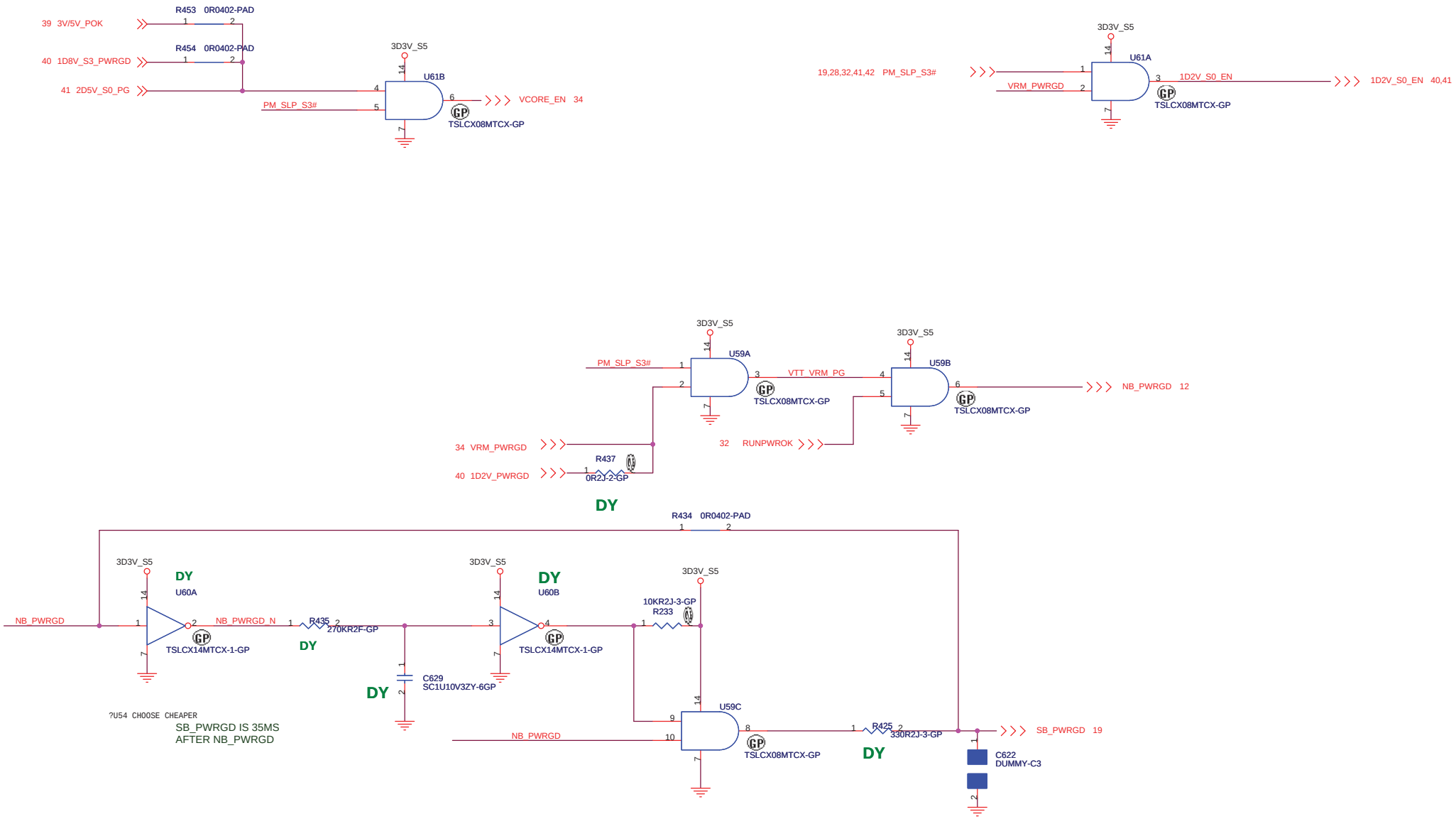

<Core Design>

緯創資通	**Wistron Corporation** 21F, 88, Sec.1, Hsin Tai Wu Rd., Hsichih, Taipei Hsien 221, Taiwan, R.O.C.
Title	***POWERGOOD&ENABLES(1/2)***
Size A3	Document Number **Yukon** Rev SA
Date: Thursday, July 03, 2008	Sheet 31 of 43

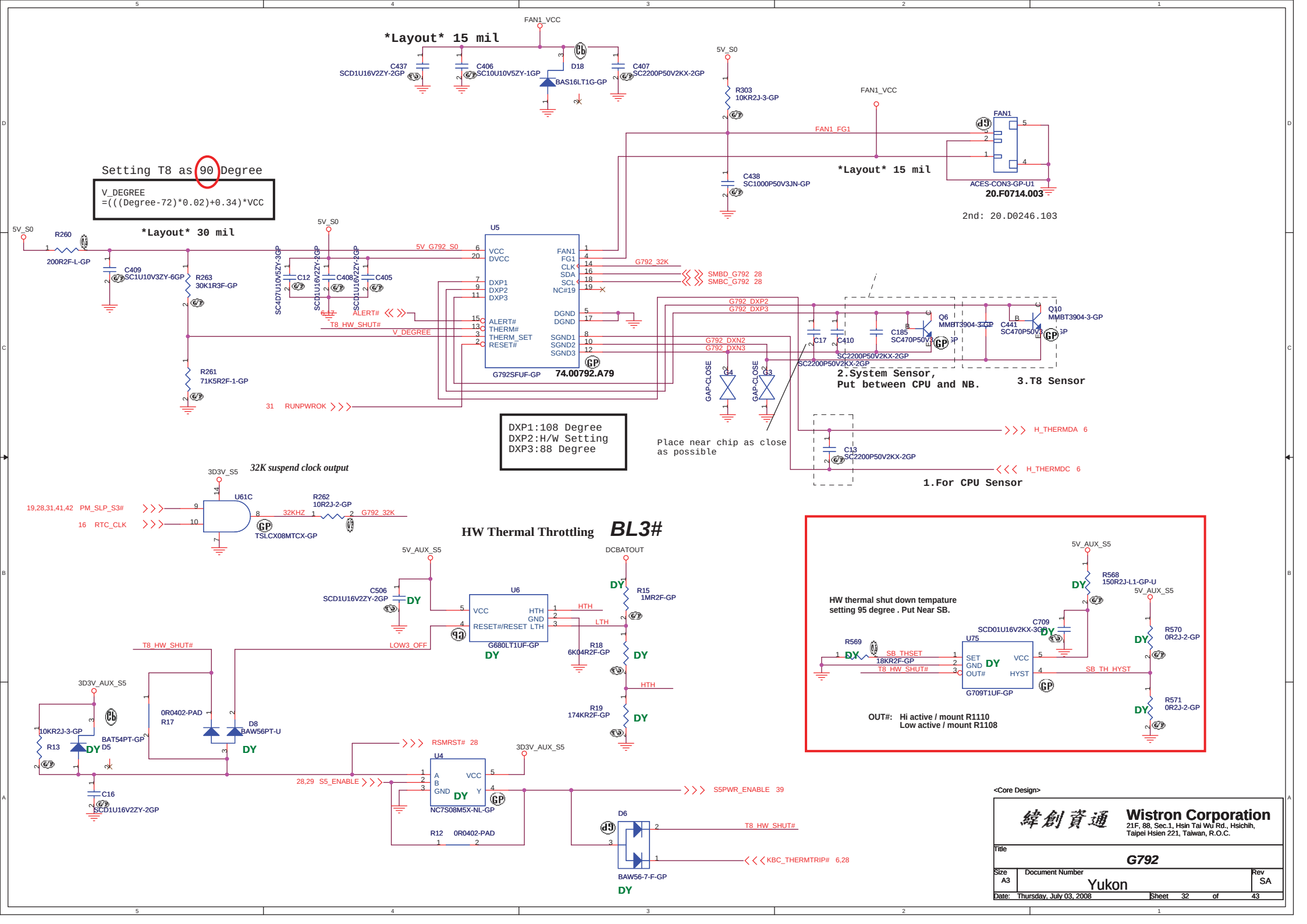
Layout 15 mil
FAN1_VCC
C437 SCD1U16V2ZY-2GP
C406 SC10U10V5ZY-1GP
D18 BAS16LT1G-GP
C407 SC2200P50V2KX-2GP
5V_S0
R303 10KR2J-3-GP
FAN1_VCC
FAN1_FG1
FAN1
Layout 15 mil
C438 SC1000P50V3JN-GP
ACES-CON3-GP-U1
20.F0714.003
2nd: 20.D0246.103
Setting T8 as 90 Degree
V_DEGREE =(((Degree-72)*0.02)+0.34)*VCC
Layout 30 mil
5V_S0
R260 200R2F-L-GP
C409 SC1U10V3ZY-6GP
R263 30K1R3F-GP
R261 71K5R2F-1-GP
SC4D7U10V5ZY-3GP
C12 SCD1U16V2ZY-2GP
C408 SCD1U16V2ZY-2GP
C405 SCD1U16V2ZY-2GP
5V_G792_S0
U5
VCC
DVCC
DXP1
DXP2
DXP3
ALERT#
THERM#
THERM_SET
RESET#
FAN1
FG1
CLK
SDA
SCL
NC#19
DGND
DGND
SGND1
SGND2
SGND3
G792SFUF-GP
74.00792.A79
G792_32K
SMBD_G792 28
SMBC_G792 28
ALERT#
T8_HW_SHUT#
V_DEGREE
RUNPWROK
G792_DXP2
G792_DXP3
G792_DXN2
G792_DXN3
C17 SC2200P50V2KX-2GP
C410 SC2200P50V2KX-2GP
C185 SC470P50V3JN-GP
Q6 MMBT3904-3-GP
C441 SC470P50V3JN-GP
Q10 MMBT3904-3-GP
GAP-CLOSE
G4
GAP-CLOSE
G3
2.System Sensor, Put between CPU and NB.
3.T8 Sensor
DXP1:108 Degree
DXP2:H/W Setting
DXP3:88 Degree
Place near chip as close as possible
C13 SC2200P50V2KX-2GP
H_THERMDA 6
H_THERMDC 6
1.For CPU Sensor
32K suspend clock output
3D3V_S5
U61C
TSLCX08MTCX-GP
19,28,31,41,42 PM_SLP_S3#
16 RTC_CLK
32KHZ
R262 10R2J-2-GP
G792_32K
HW Thermal Throttling
BL3#
5V_AUX_S5
C506 SCD1U16V2ZY-2GP
DY
U6
VCC
RESET#/RESET
HTH
GND
LTH
G680LT1UF-GP
DY
DCBATOUT
R15 1MR2F-GP
R18 6K04R2F-GP
R19 174KR2F-GP
T8_HW_SHUT#
LOW3_OFF
3D3V_AUX_S5
10KR2J-3-GP
R13
BAT54PT-GP
D5
0R0402-PAD
R17
D8 BAW56PT-U
C16 SCD1U16V2ZY-2GP
RSMRST# 28
28,29 S5_ENABLE
U4
A
B
GND
VCC
Y
NC7S08M5X-NL-GP
R12 0R0402-PAD
S5PWR_ENABLE 39
D6
BAW56-7-F-GP
KBC_THERMTRIP# 6,28
HW thermal shut down tempature setting 95 degree . Put Near SB.
R568 150R2J-L1-GP-U
C709 SCD01U16V2KX-3GP
R569 18KR2F-GP
SB_THSET
T8_HW_SHUT#
U75
SET
GND
OUT#
VCC
HYST
G709T1UF-GP
SB_TH_HYST
R570 0R2J-2-GP
R571 0R2J-2-GP
OUT#: Hi active / mount R1110
Low active / mount R1108
<Core Design>
Wistron Corporation
21F, 88, Sec.1, Hsin Tai Wu Rd., Hsichih, Taipei Hsien 221, Taiwan, R.O.C.
Title
G792
Size A3
Document Number
Yukon
Rev SA
Date: Thursday, July 03, 2008
Sheet 32 of 43

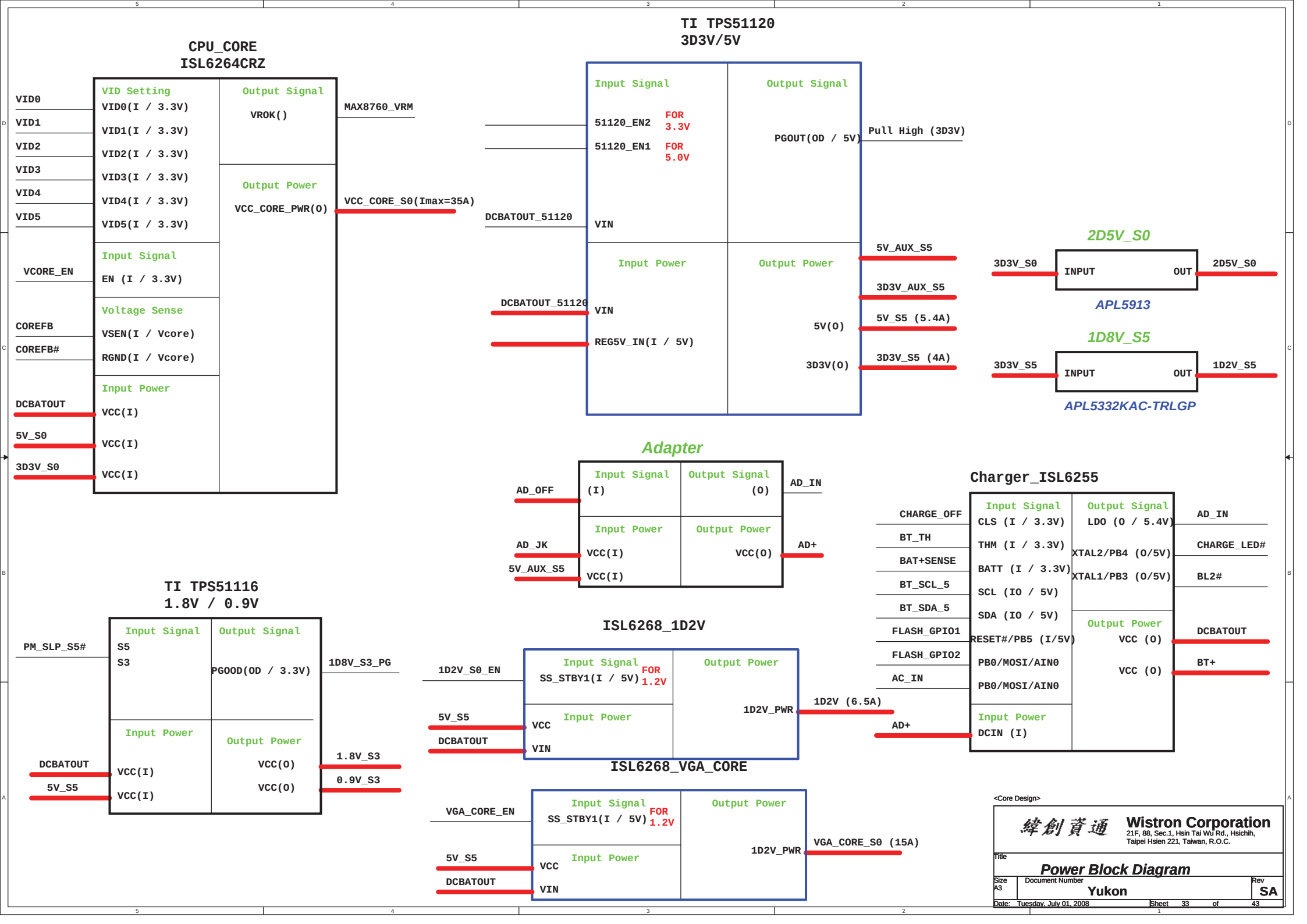
CPU_CORE
ISL6264CRZ
VID0
VID1
VID2
VID3
VID4
VID5
VIDSetting
VID0(I / 3.3V)
VID1(I / 3.3V)
VID2(I / 3.3V)
VID3(I / 3.3V)
VID4(I / 3.3V)
VID5(I / 3.3V)
Output Signal
VROK()
MAX8760_VRM
Output Power
VCC_CORE_PWR(O)
VCC_CORE_S0(Imax=35A)
VCORE_EN
Input Signal
EN (I / 3.3V)
COREFB
COREFB#
Voltage Sense
VSEN(I / Vcore)
RGND(I / Vcore)
DCBATOUT
5V_S0
3D3V_S0
Input Power
VCC(I)
VCC(I)
VCC(I)
TI TPS51120
3D3V/5V
Input Signal
51120_EN2
FOR 3.3V
51120_EN1
FOR 5.0V
DCBATOUT_51120
VIN
Output Signal
PGOUT(OD / 5V)
Pull High (3D3V)
Input Power
DCBATOUT_51120
VIN
REG5V_IN(I / 5V)
Output Power
5V(O)
3D3V(O)
5V_AUX_S5
3D3V_AUX_S5
5V_S5 (5.4A)
3D3V_S5 (4A)
2D5V_S0
3D3V_S0
INPUT
OUT
2D5V_S0
APL5913
1D8V_S5
3D3V_S5
INPUT
OUT
1D2V_S5
APL5332KAC-TRLGP
Adapter
AD_OFF
Input Signal
(I)
Output Signal
(O)
AD_IN
AD_JK
5V_AUX_S5
Input Power
VCC(I)
VCC(I)
Output Power
VCC(O)
AD+
Charger_ISL6255
CHARGE_OFF
BT_TH
BAT+SENSE
BT_SCL_5
BT_SDA_5
FLASH_GPIO1
FLASH_GPIO2
AC_IN
Input Signal
CLS (I / 3.3V)
THM (I / 3.3V)
BATT (I / 3.3V)
SCL (IO / 5V)
SDA (IO / 5V)
RESET#/PB5 (I/5V)
PB0/MOSI/AIN0
PB0/MOSI/AIN0
Output Signal
LDO (O / 5.4V)
XTAL2/PB4 (O/5V)
XTAL1/PB3 (O/5V)
AD_IN
CHARGE_LED#
BL2#
Output Power
VCC (O)
VCC (O)
DCBATOUT
BT+
Input Power
DCIN (I)
AD+
TI TPS51116
1.8V / 0.9V
PM_SLP_S5#
Input Signal
S5
S3
Output Signal
PGOOD(OD / 3.3V)
1D8V_S3_PG
Input Power
DCBATOUT
5V_S5
VCC(I)
VCC(I)
Output Power
VCC(O)
VCC(O)
1.8V_S3
0.9V_S3
ISL6268_1D2V
1D2V_S0_EN
Input Signal
SS_STBY1(I / 5V)
FOR 1.2V
Output Power
1D2V_PWR
1D2V (6.5A)
5V_S5
DCBATOUT
Input Power
VCC
VIN
ISL6268_VGA_CORE
VGA_CORE_EN
Input Signal
SS_STBY1(I / 5V)
FOR 1.2V
Output Power
1D2V_PWR
VGA_CORE_S0 (15A)
5V_S5
DCBATOUT
Input Power
VCC
VIN
<Core Design>
緯創資通
Wistron Corporation
21F, 88, Sec.1, Hsin Tai Wu Rd., Hsichih,
Taipei Hsien 221, Taiwan, R.O.C.
Title
Power Block Diagram
Size
A3
Document Number
Yukon
Rev
SA
Date: Tuesday, July 01, 2008
Sheet 33 of 43

CPU_VCORE
VID=1.20V(25W)/1.15V(35W)
Iomax=21A(25W)/35A (35W)
OCP=40A~45A

TABLE 1. VOLTAGE IDENTIFICATION CODES

VID5	VID4	VID3	VID2	VID1	VID0	DAC
0	0	0	0	0	0	1.550
0	0	0	0	0	1	1.525
0	0	0	0	1	0	1.500
0	0	0	0	1	1	1.475
0	0	0	1	0	0	1.450
0	0	0	1	0	1	1.425
0	0	0	1	1	0	1.400
0	0	0	1	1	1	1.375
0	0	1	0	0	0	1.350
0	0	1	0	0	1	1.325
0	0	1	0	1	0	1.300
0	0	1	0	1	1	1.275
0	0	1	1	0	0	1.250
0	0	1	1	0	1	1.225
0	0	1	1	1	0	1.200
0	0	1	1	1	1	1.175
0	1	0	0	0	0	1.150
0	1	0	0	0	1	1.125
0	1	0	0	1	0	1.100
0	1	0	0	1	1	1.075
0	1	0	1	0	0	1.050
0	1	0	1	0	1	1.025
0	1	0	1	1	0	1.000
0	1	0	1	1	1	0.975
0	1	1	0	0	0	0.950
0	1	1	0	0	1	0.925
0	1	1	0	1	0	0.900
0	1	1	0	1	1	0.875
0	1	1	1	0	0	0.850
0	1	1	1	0	1	0.825
0	1	1	1	1	0	0.800
0	1	1	1	1	1	0.775
1	0	0	0	0	0	0.7625
1	0	0	0	0	1	0.75
1	0	0	0	1	0	0.7375
1	0	0	0	1	1	0.725
1	0	0	1	0	0	0.7125
1	0	0	1	0	1	0.7
1	1	1	1	1	1	0.375

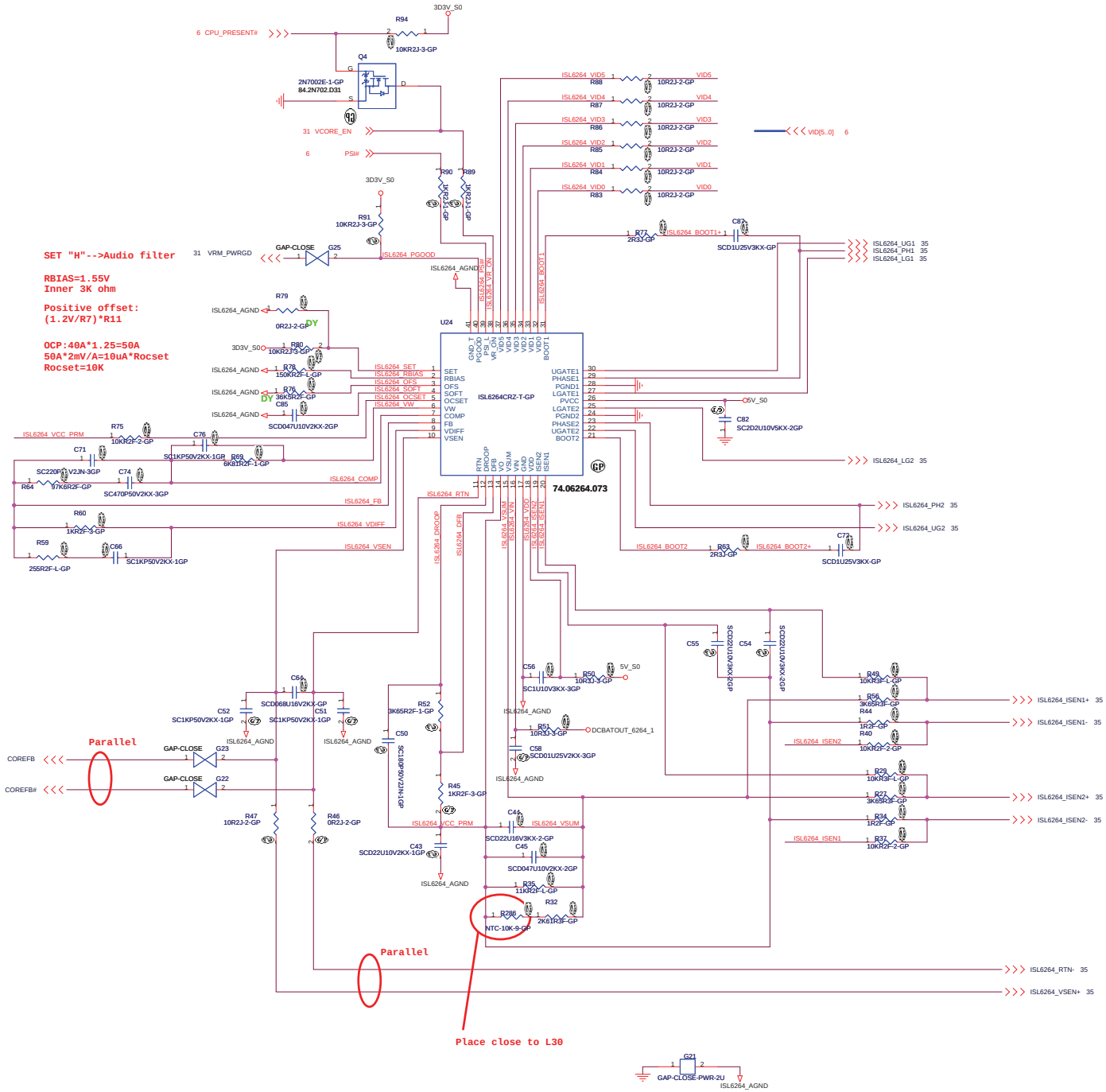

<Core Design>

Wistron Corporation
21F, 88, Sec.1, Hsin Tai Wu Rd., Hsichih,
Taipei Hsien 221, Taiwan, R.O.C.

Title: *CPU Vcore Power_1*

Size	Document Number	Rev
A2	Yukon	SA

Date: Thursday, July 03, 2008 Sheet 34 of 43

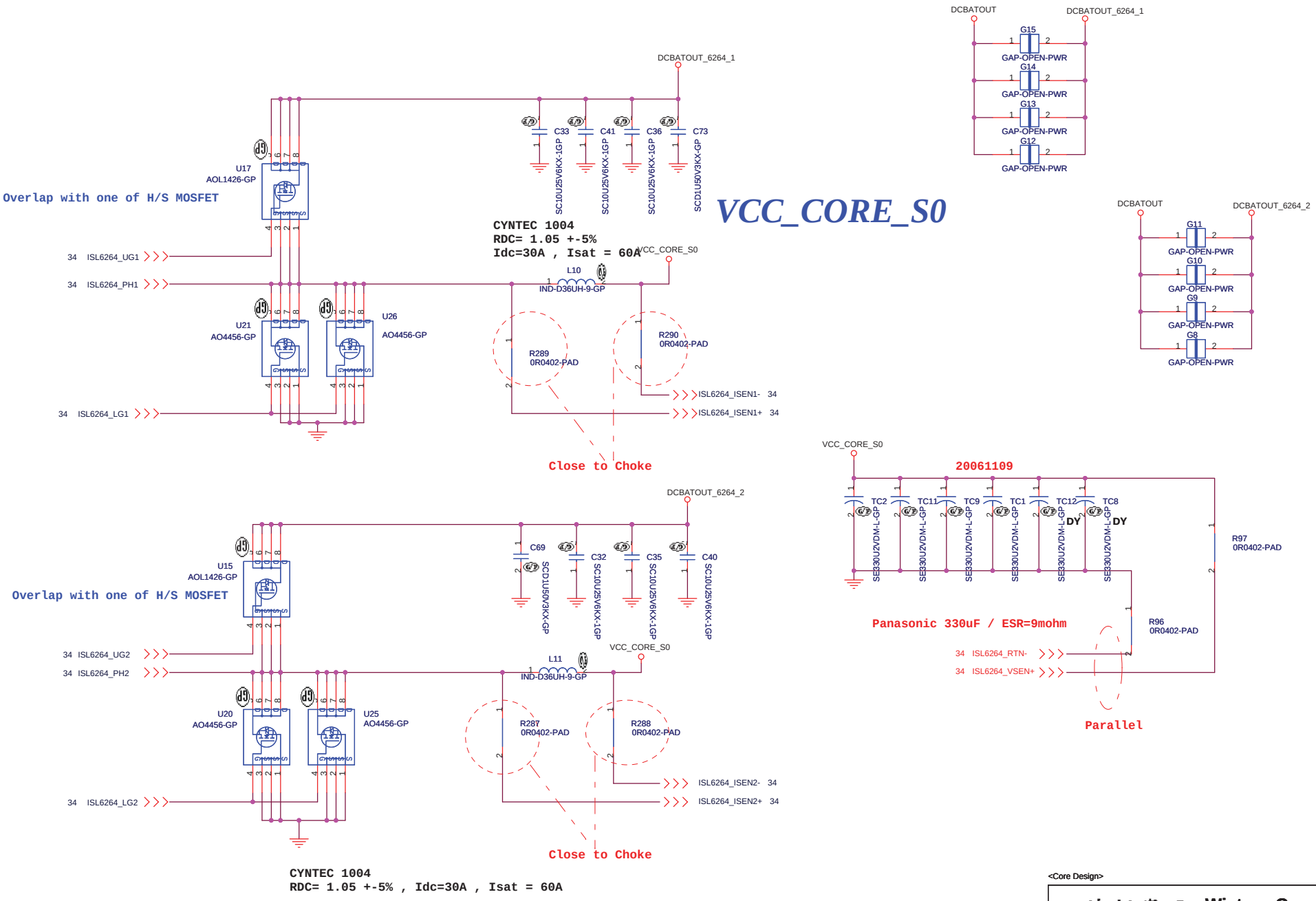

<Core Design>

緯創資通	**Wistron Corporation** 21F, 88, Sec.1, Hsin Tai Wu Rd., Hsichih, Taipei Hsien 221, Taiwan, R.O.C.	
Title	***CPU Vcore Power_2***	
Size A3	Document Number **Yukon**	Rev SA
Date: Thursday, July 03, 2008	Sheet 35 of 43	

Aux Power

3D3V_AUX_S5

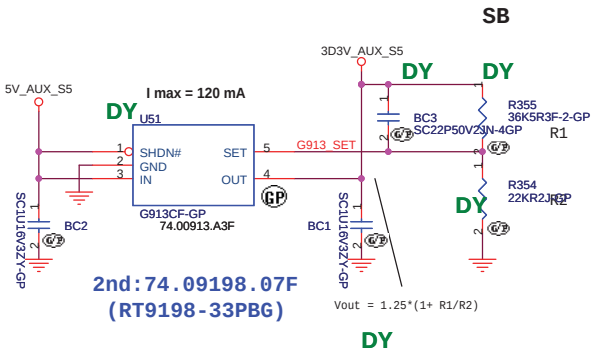

Aux Power 3D3V_AUX_S5

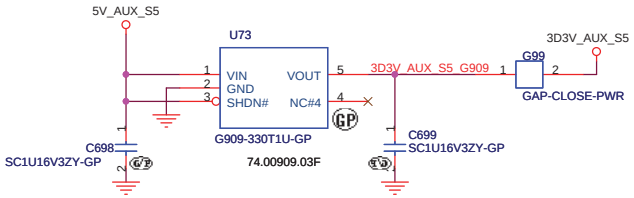

<Core Design>

緯創資通 **Wistron Corporation**
21F, 88, Sec.1, Hsin Tai Wu Rd., Hsichih,
Taipei Hsien 221, Taiwan, R.O.C.

Title		
3D3V_AUX		
Size A3	Document Number Yukon	Rev SA
Date: Tuesday, July 01, 2008	Sheet 36 of 43	

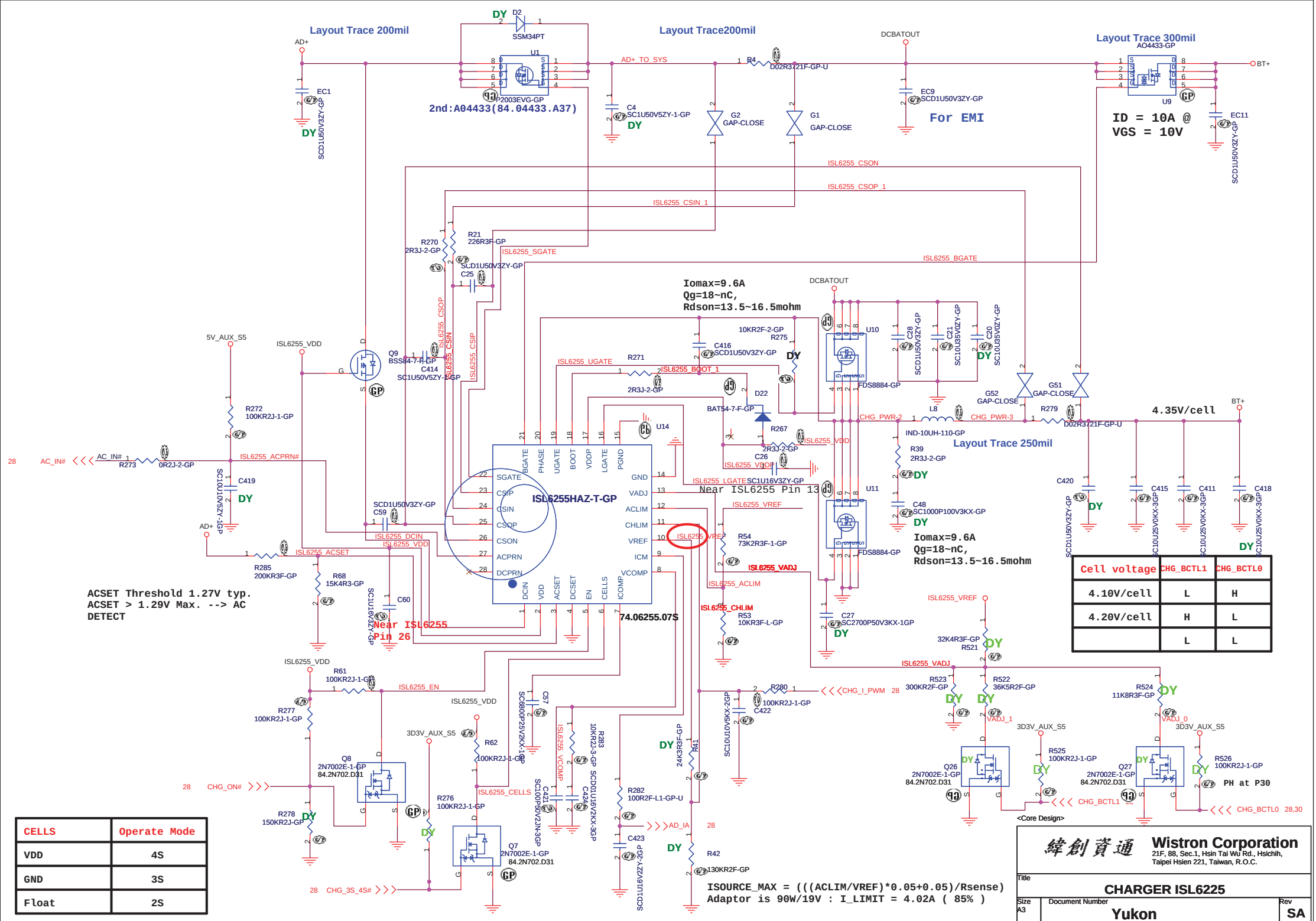

Cell voltage	CHG_BCTL1	CHG_BCTL0
4.10V/cell	L	H
4.20V/cell	H	L
	L	L

CELLS	Operate Mode
VDD	4S
GND	3S
Float	2S

Wistron Corporation
21F, 88, Sec.1, Hsin Tai Wu Rd., Hsichih, Taipei Hsien 221, Taiwan, R.O.C.

Title: CHARGER ISL6225

Size: A3 | Document Number: Yukon | Rev: SA

Date: Thursday, July 03, 2008 | Sheet 37 of 43

Adaptor in to generate DCBATOUT

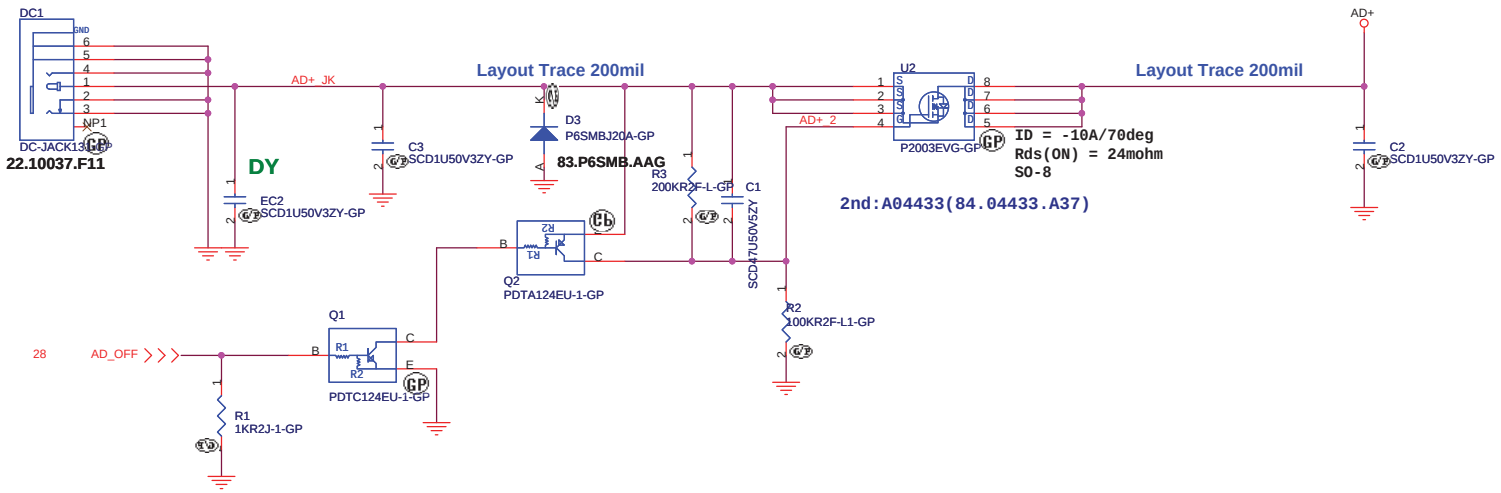

BATTERY CONNECTOR

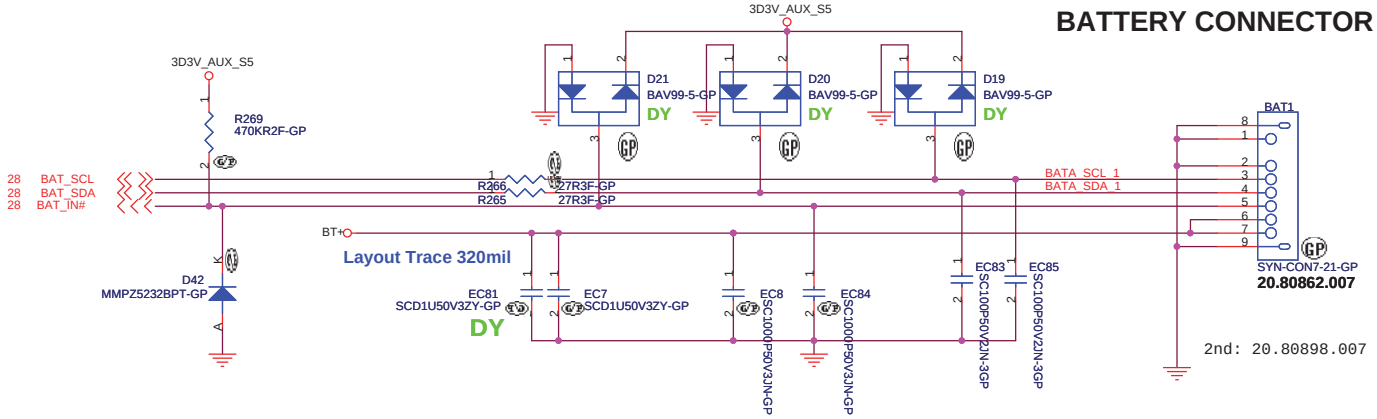

<Variant Name>

緯創資通	**Wistron Corporation** 21F, 88, Sec.1, Hsin Tai Wu Rd., Hsichih, Taipei Hsien 221, Taiwan, R.O.C.	
Title	**AD/BATT CONN**	
Size A3	Document Number **Yukon**	Rev **SA**
Date: Thursday, July 03, 2008	Sheet 38 of 43	

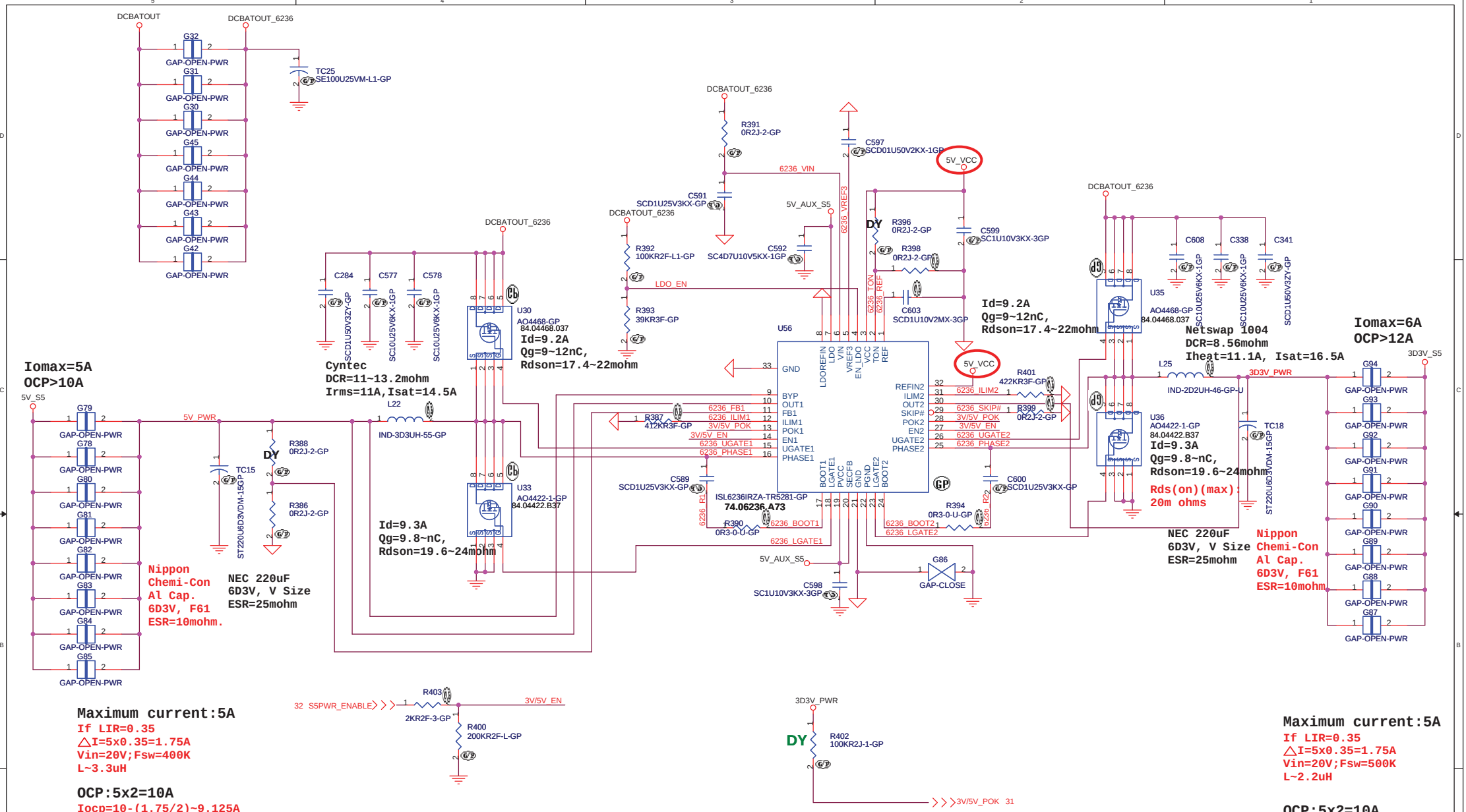

<Core Design>

緯創資通 **Wistron Corporation**
21F, 88, Sec.1, Hsin Tai Wu Rd., Hsichih,
Taipei Hsien 221, Taiwan, R.O.C.

Title	*ISL6236 5V 3D3V*	
Size A3	Document Number **Yukon**	Rev **SA**
Date: Thursday, July 03, 2008	Sheet 39 of 43	

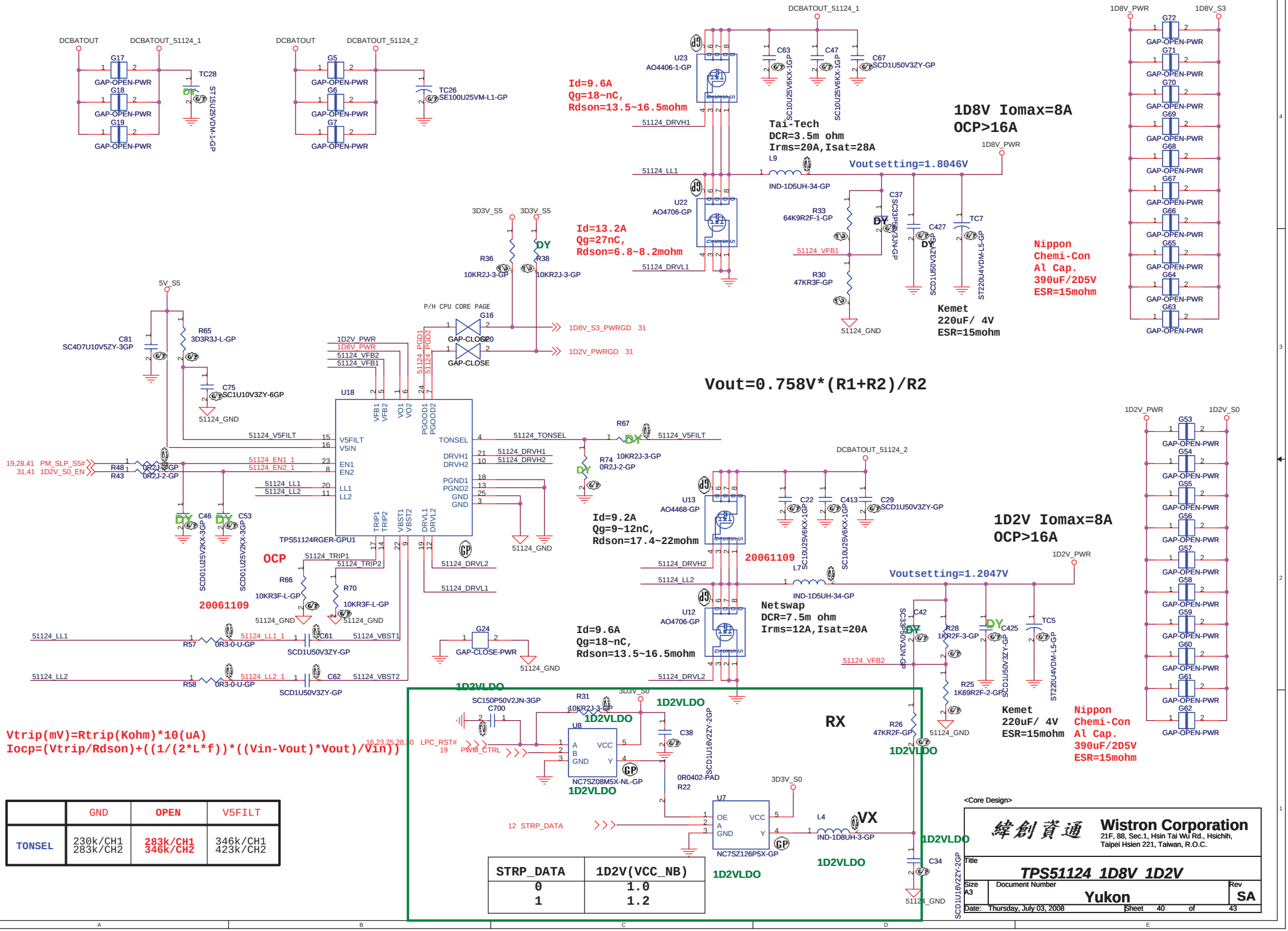
DCBATOUT
DCBATOUT_51124_1
DCBATOUT_51124_2
G17
G18
G19
G5
G6
G7
GAP-OPEN-PWR
TC28
ST15U25VDM-1-GP
TC26
SE100U25VM-L1-GP
Id=9.6A
Qg=18~nC,
Rdson=13.5~16.5mohm
U23
AO4406-1-GP
C63
C47
C67
SCD1U50V3ZY-GP
51124_DRVH1
51124_LL1
Tai-Tech
DCR=3.5m ohm
Irms=20A,Isat=28A
L9
IND-1D5UH-34-GP
1D8V Iomax=8A
OCP>16A
1D8V_PWR
Voutsetting=1.8046V
U22
AO4706-GP
Id=13.2A
Qg=27nC,
Rdson=6.8~8.2mohm
51124_DRVL1
R33
64K9R2F-1-GP
C37
51124_VFB1
R30
47KR3F-GP
51124_GND
C427
TC7
SCD1U50V3ZY-GP
ST220U4VDM-L5-GP
Kemet
220uF/ 4V
ESR=15mohm
Nippon
Chemi-Con
Al Cap.
390uF/2D5V
ESR=15mohm
G72
G71
G70
G69
G68
G67
G66
G65
G64
G63
3D3V_S5
R36
10KR2J-3-GP
R38
DY
P/H CPU CORE PAGE
G16
GAP-CLOSE
1D8V_S3_PWRGD 31
1D2V_PWRGD 31
5V_S5
C81
SC4D7U10V5ZY-3GP
R65
3D3R3J-L-GP
C75
SC1U10V3ZY-6GP
1D2V_PWR
1D8V_PWR
51124_VFB2
51124_VFB1
51124_PGOD1
51124_PGOD2
U18
VFB1
VFB2
VO1
VO2
PGOOD1
PGOOD2
V5FILT
V5IN
EN1
EN2
LL1
LL2
TONSEL
DRVH1
DRVH2
PGND1
PGND2
GND
TRIP1
TRIP2
VBST1
VBST2
DRVL1
DRVL2
TPS51124RGER-GPU1
51124_V5FILT
51124_TONSEL
R67
R74
10KR2J-3-GP
0R2J-2-GP
51124_DRVH1
51124_DRVH2
19,28,41 PM_SLP_S5#
31,41 1D2V_S0_EN
R48
R43
51124_EN1_1
51124_EN2_1
51124_LL1
51124_LL2
C46
C53
SCD01U25V2KX-3GP
OCP
51124_TRIP1
51124_TRIP2
R66
10KR3F-L-GP
R70
20061109
51124_DRVL2
51124_DRVL1
G24
GAP-CLOSE-PWR
Vout=0.758V*(R1+R2)/R2
U13
AO4468-GP
C22
C413
C29
SC10U25V6KX-1GP
SCD1U50V3ZY-GP
Id=9.2A
Qg=9~12nC,
Rdson=17.4~22mohm
DCBATOUT_51124_2
1D2V Iomax=8A
OCP>16A
1D2V_PWR
Voutsetting=1.2047V
L7
IND-1D5UH-34-GP
U12
AO4706-GP
Netswap
DCR=7.5m ohm
Irms=12,Isat=20A
Id=9.6A
Qg=18~nC,
Rdson=13.5~16.5mohm
C42
R28
1KR2F-3-GP
C425
TC5
R25
1K69R2F-2-GP
51124_VFB2
R57
0R3-0-U-GP
C61
SCD1U50V3ZY-GP
51124_VBST1
R58
C62
51124_VBST2
G53
G54
G55
G56
G57
G58
G59
G60
G61
G62
1D2V_S0
1D2VLDO
SC150P50V2JN-3GP
C700
R31
10KR2J-3-GP
3D3V_S0
U8
NC7SZ08M5X-NL-GP
C38
SCD1U16V2ZY-2GP
0R0402-PAD
R22
RX
R26
47KR2F-GP
16,23,25,28,30 LPC_RST#
19 PWM_CTRL
U7
NC7SZ126P5X-GP
12 STRP_DATA
L4
IND-1D8UH-3-GP
VX
C34
Vtrip(mV)=Rtrip(Kohm)*10(uA)
Iocp=(Vtrip/Rdson)+((1/(2*L*f))*((Vin-Vout)*Vout)/Vin))
STRP_DATA | 1D2V(VCC_NB)
0 | 1.0
1 | 1.2
GND | OPEN | V5FILT
TONSEL | 230k/CH1 283k/CH2 | 283k/CH1 346k/CH2 | 346k/CH1 423k/CH2
<Core Design>
Wistron Corporation
21F, 88, Sec.1, Hsin Tai Wu Rd., Hsichih,
Taipei Hsien 221, Taiwan, R.O.C.
Title
TPS51124 1D8V 1D2V
Size A3
Document Number
Yukon
Rev SA
Date: Thursday, July 03, 2008
Sheet 40 of 43

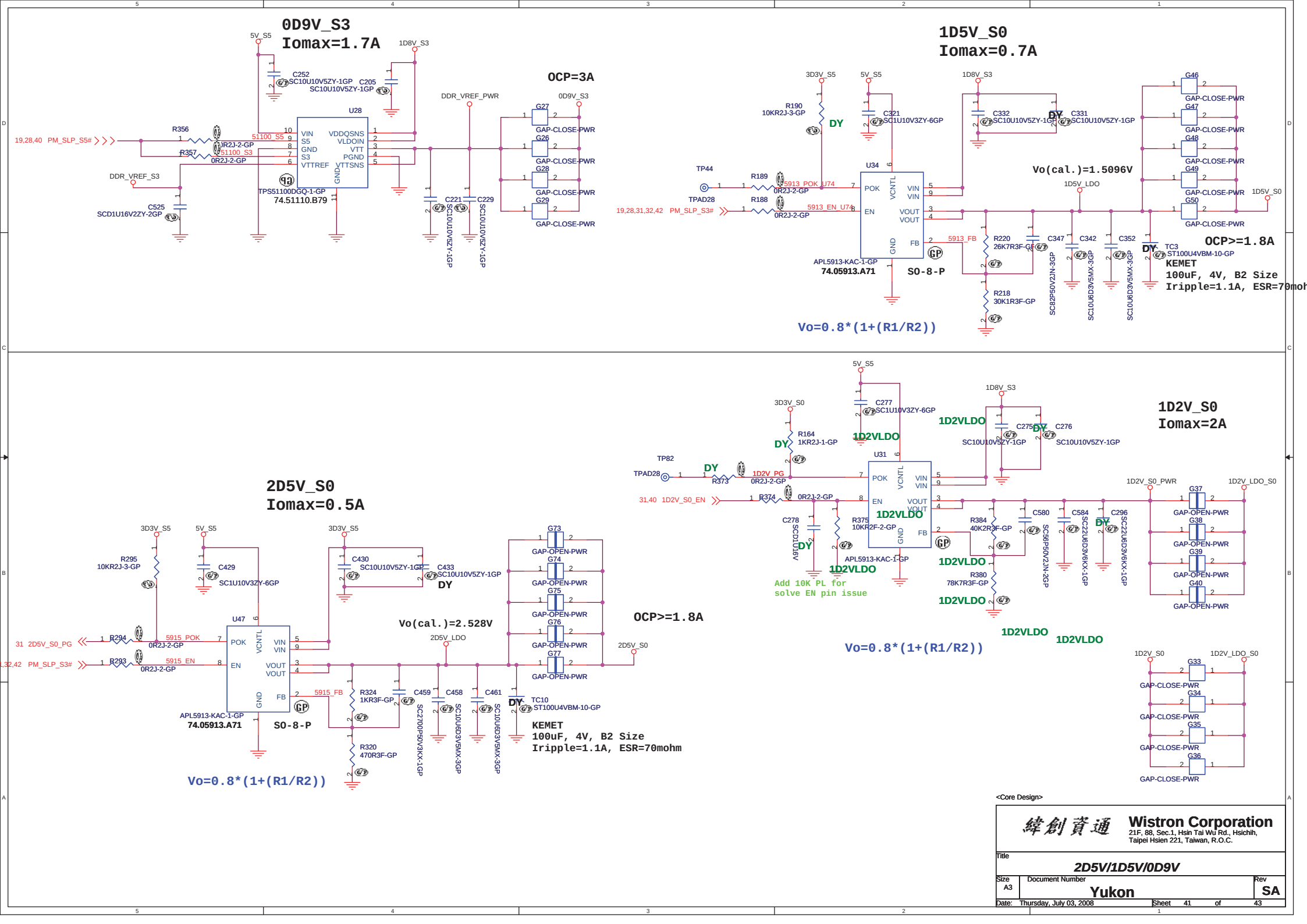
0D9V_S3
Iomax=1.7A
OCP=3A
U28
TPS51100DGQ-1-GP
74.51110.B79
1D5V_S0
Iomax=0.7A
Vo(cal.)=1.5096V
U34
APL5913-KAC-1-GP
74.05913.A71
SO-8-P
OCP>=1.8A
KEMET
100uF, 4V, B2 Size
Iripple=1.1A, ESR=70mohm
Vo=0.8*(1+(R1/R2))
1D2V_S0
Iomax=2A
U31
Add 10K PL for
solve EN pin issue
Vo=0.8*(1+(R1/R2))
2D5V_S0
Iomax=0.5A
U47
APL5913-KAC-1-GP
74.05913.A71
SO-8-P
Vo(cal.)=2.528V
OCP>=1.8A
KEMET
100uF, 4V, B2 Size
Iripple=1.1A, ESR=70mohm
Vo=0.8*(1+(R1/R2))
<Core Design>
Wistron Corporation
21F, 88, Sec.1, Hsin Tai Wu Rd., Hsichih,
Taipei Hsien 221, Taiwan, R.O.C.
Title
2D5V/1D5V/0D9V
Size A3
Document Number
Yukon
Rev SA
Date: Thursday, July 03, 2008
Sheet 41 of 43

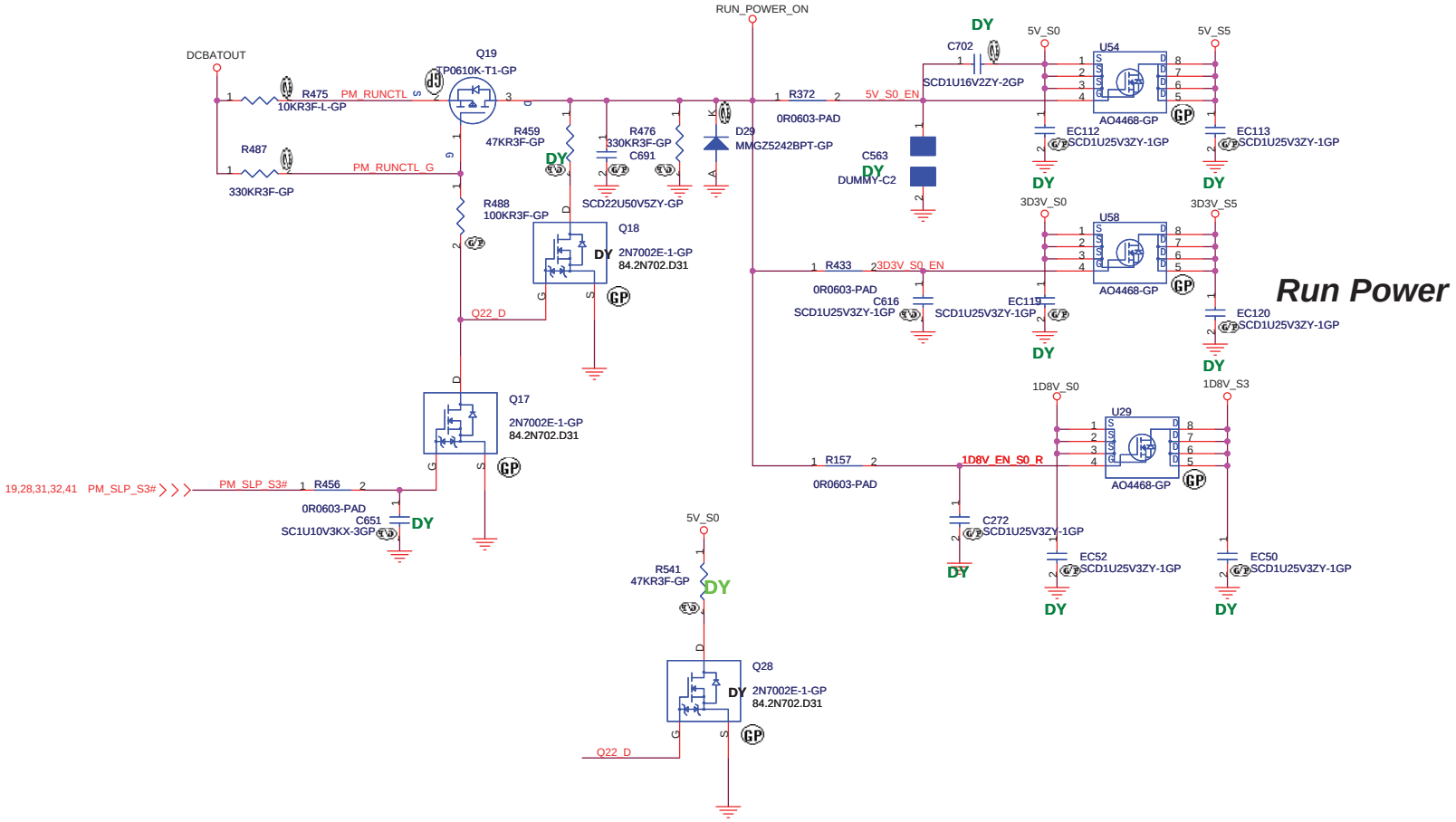

Run Power

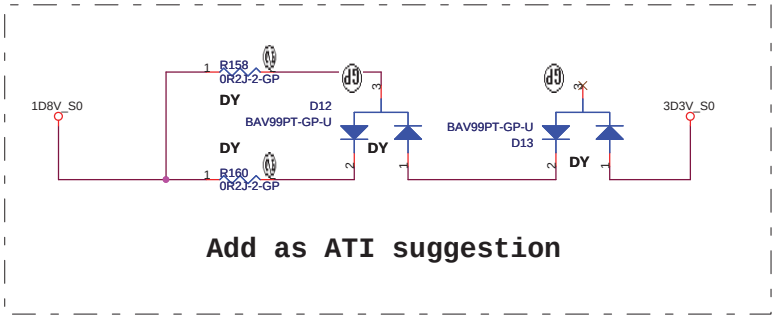

Power On Logic

<Core Design>

緯創資通	**Wistron Corporation** 21F, 88, Sec.1, Hsin Tai Wu Rd., Hsichih, Taipei Hsien 221, Taiwan, R.O.C.	
Title	***RUB POWER***	
Size A3	Document Number Yukon	Rev SA
Date: Thursday, July 03, 2008	Sheet 42 of 43	

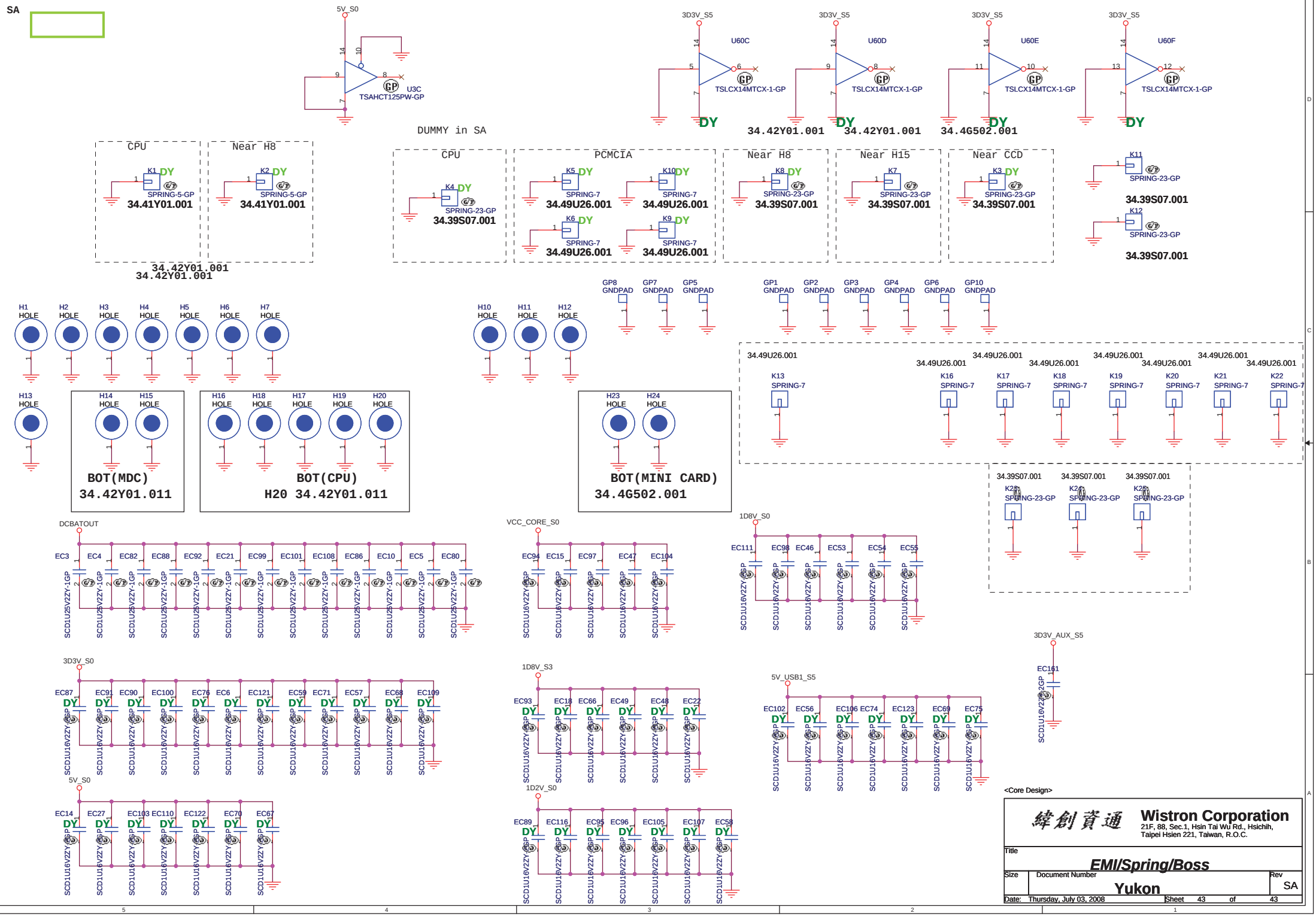
SA
5V_S0
U3C
TSAHCT125PW-GP
DUMMY in SA
3D3V_S5
U60C
U60D
U60E
U60F
TSLCX14MTCX-1-GP
DY
34.42Y01.001
34.4G502.001
CPU
Near H8
K1
K2
SPRING-5-GP
34.41Y01.001
34.42Y01.001
K4
SPRING-23-GP
34.39S07.001
PCMCIA
K5
K6
K9
K10
SPRING-7
34.49U26.001
Near H15
K7
Near CCD
K3
K11
K12
H1 HOLE
H2 HOLE
H3 HOLE
H4 HOLE
H5 HOLE
H6 HOLE
H7 HOLE
H10 HOLE
H11 HOLE
H12 HOLE
H13 HOLE
H14 HOLE
H15 HOLE
H16 HOLE
H18 HOLE
H17 HOLE
H19 HOLE
H20 HOLE
H23 HOLE
H24 HOLE
BOT(MDC)
34.42Y01.011
BOT(CPU)
H20 34.42Y01.011
BOT(MINI CARD)
34.4G502.001
GP8 GNDPAD
GP7 GNDPAD
GP5 GNDPAD
GP1 GNDPAD
GP2 GNDPAD
GP3 GNDPAD
GP4 GNDPAD
GP6 GNDPAD
GP10 GNDPAD
K13
K16
K17
K18
K19
K20
K21
K22
K23
K24
K25
DCBATOUT
VCC_CORE_S0
1D8V_S0
3D3V_S0
1D8V_S3
5V_USB1_S5
3D3V_AUX_S5
1D2V_S0
EC161
SCD1U16V2Z-2GP
SCD1U25V2Z-1GP
SCD1U16V2Z-1GP
<Core Design>
緯創資通
Wistron Corporation
21F, 88, Sec.1, Hsin Tai Wu Rd., Hsichih,
Taipei Hsien 221, Taiwan, R.O.C.
Title
EMI/Spring/Boss
Size
Document Number
Yukon
Rev
SA
Date: Thursday, July 03, 2008
Sheet 43 of 43